제 2014 - 16554 호

안 전 인 증 서

(사업장명) 극동호이스트(주)

(소 재 지)(425-833)경기도 안산시 성곡동630-2 반월공단 B-607-14

위 사업장에서 제조하는 아래의 품목이 산업안전보건법 제34조 및 같은 법 시행규칙 제58조의4제4항에 따른 안전인증 심사 결과 안전·보건기준에 적합하므로 안전인증표시의 사용을 인증합니다.

품 목

호이스트

형식,모델(용량,등급)/인증번호

KDC1.5-M (1.5Ton) /14-AQ2AC-01115

인 증 기 준

고용노동부 고시 제2012 - 33호 (위험기계,기구 의무안전인증 고시)

인 증 조 건

2014년 04월 21일

한국산업안전보건공단이사장

심사결과 통지서

신청인	사업장명	극동호이스트(주)	사업장관리번호 134-81-013350
	사업자등록번호	134-81-01335	대표자 성명 최성찬
	소재지	(425 - 833) 경기도 안산시 성곡동630-2 반월공단 B-607-14	

안전인증대상 기계·기구명	모노레일식호이스트		
형 식 (규 격)	KDC1.5-M	용 량 (등 급)	1.5 Ton

산업안전보건법 제 34조 및 같은 법 시행규칙 제58조의4에 따라 실시한

[ ] 예비심사

[√] 서면심사

[ ] 기술능력 및 생산체계 심사

[ ] 개별 제품심사

[ ] 개별 제품심사(제작중)

[ ] 형식별 제품심사

결과가 [√] 적 합 / [ ] 부적합 함을 통지합니다.

2014년 04월 14일

인증심사원 강성두 변명수 (서명 또는 인)

한국산업안전보건공단 경기서부지도원장

불법복제 및 배포금지

서 면 심 사 서 류

형식 번호 : KDC1.5-M

극 동 호 이 스 트 (주)

工場 : 경기도 안산시 단원구 해봉로 119 (성곡동)

電話 : 031) 491 - 5311

FAX : 031) 494 - 5315

산업재해예방
안전보건공단
KOREA OCCUPATIONAL SAFETY & HEALTH AGENCY

192.168.11.76 / 2014-04-19 09:48:43

동 일 형 식 일 람 표

사업장명	극동호이스트㈜	개정일자 및 번호	2014년 03월 28일	인증번호	
형식 및 모델		동일 형식 인정범위 및 내역			비 고
형식	모델	권상속도(m/min)	횡행속도(m/min)	양정(m)	횡행방식
KDC1.5-M	KDC1.5-L6-M	고속:10M/MIN CREEP:1.0M/MIN	고속:24M/MIN 저속:16M/MIN 듀얼고속:24/12M/MIN 듀얼저속:16/8M/MIN	6	모터구동식
	KDC1.5-L6.5-M			6.5	
	KDC1.5-L9-M			9	
	KDC1.5-L12-M			12	
	KDC1.5-L18-M			18	
	KDC1.5-L24-M			24	
	KDC1.5-L30-M			30	

산업재해예방 안전보건공단
KOREA OCCUPATIONAL SAFETY & HEALTH AGENCY
192.168.11.76 / 2014-04-19 09:48:43
한국산업안전보건공단 검사필
불법복제 및 배포금지

불법복제 및 배포금지

호 이 스 트 설 계 조 건

항 목			내 용		
형 식 번 호			KDC1.5-M	모 델	KDC1.5-L6-M, KDC1.5-L6.5-M, KDC1.5-L9-M KDC1.5-L12-M, KDC1.5-L18-M
형 식 번 호			모노 레일식 와이어 호이스트		
정 격 하 중	주 권	정격하중	1.5 TON		
		시험하중	1.875 TON		
	복 권	정격하중	–		
		시험하중	–		
주권 달기구	종 류		SINGLE HOOK & DOUBLE HOOK		
	자체하중		0.02		
양 정 (LIFT)			6,6.5,9,12,18 M		
호이스트 (HOIST)	HIGH	SPEED	10.0 / 1.0 M/MIN		
		MOTOR	3.7 /0.4 KW x 4P		
	BRAKE		D.C MAGNET DISC BRAKE		
TRAVERSING	HIGH	SPEED	24 M/MIN		
		MOTOR	0.75 KW x 4P		
	LOW	SPEED	16 M/MIN		
		MOTOR	0.5 KW x 6P		
	DUAL HIGH	SPEED	24 / 12 M/MIN		
		MOTOR	0.8/0.4 KW x 4/8P		
	DUAL LOW	SPEED	16/8 M/MIN		
		MOTOR	0.5/0.25 KW x 6/12P		
	BRAKE		D.C MAGNET DISC BRAKE & NO BRAKE		
WIRE ROPE			(6x37) ø10 x 2 FALLS		
			STAINLESS STEEL(7x19) ø10(3/8") x 2 FALLS		
POWER SOURCE	MAIN		AC ø3 x 220V (380,440,460,480V) x 60Hz		
	CONTROL		AC ø1 x 110V(120V) x 60Hz		
CONTROL METHOD			F.L 상 PUSH BUTTON 조작		
방 호 장 치			과부하방지장치,과권방지장치, HOOK 해지장치 횡행 STOPPER, 비상정지장치		
사 용 용 도			창고용 , 정비용 , 일반화물 인양작업		
설 치 위 치			☒ 옥 내 ☒ 옥 외		
하중을 받는 회수			1.2×10^5 회 이상 2.5×10^5 회 미만		
사 용 조 건			정격하중63% 이상 80% 이하의 하중용 HOIST		
주 위 온 도			-10 ~ 40℃ 이내		
방 폭 구 조 사 용 유 무			□ 유 ☒ 무		

산업재해예방 안전보건공단
KOREA OCCUPATIONAL SAFETY & HEALTH AGENCY
192.168.11.76 / 2014-04-19 09:48:43

불법복제 및 배포금지

호 이 스 트 설 계 조 건

항 목		내 용		
형 식 번 호		KDC1.5-M	모 델	KDC1.5-L24-M, KDC1.5-L30-M
형 식 번 호		모노 레일식 와이어 호이스트		
정 격 하 중	주 권	정격하중	1.5 TON	
		시험하중	1.875 TON	
	복 권	정격하중	-	
		시험하중	-	
주권 달기구	종 류	SINGLE HOOK & DOUBLE HOOK		
	자체하중	0.02		
양 정 (LIFT)		24,30 M		
호이스트 (HOIST)	HIGH	SPEED	10.0 / 1.0 M/MIN	
		MOTOR	3.7 /0.4 KW x 4P	
	BRAKE	D.C MAGNET DISC BRAKE		
TRAVERSING	HIGH	SPEED	24 M/MIN	
		MOTOR	(0.75 KW x 4P) x 2UNITS	
	LOW	SPEED	16 M/MIN	
		MOTOR	(0.5 KW x 6P) x 2UNITS	
	DUAL HIGH	SPEED	24 / 12 M/MIN	
		MOTOR	(0.8/0.4 KW x 4/8P) x 2UNITS	
	DUAL LOW	SPEED	16/8 M/MIN	
		MOTOR	(0.5/0.25 KW x 6/12P) x 2UNITS	
	BRAKE	D.C MAGNET DISC BRAKE & NO BRAKE		
WIRE ROPE		(6x37) ø10 x 2 FALLS		
		STAINLESS STEEL(7x19) ø10(3/8") x 2 FALLS		
POWER SOURCE	MAIN	AC ø3 x 220V(380,440,460,480V) x 60Hz		
	CONTROL	AC ø1 x 110V(120V) x 60Hz		
CONTROL METHOD		F.L 상 PUSH BUTTON 조작		
방 호 장 치		과부하방지장치,과권방지장치, HOOK 해지장치 횡행 STOPPER, 비상정지장치		
사 용 용 도		창고용 , 정비용 , 일반화물 인양작업		
설 치 위 치		☒ 옥 내 ☒ 옥 외		
하중을 받는 회수		1.2×10^5 회 이상 2.5×10^5 회 미만		
사 용 조 건		정격하중63% 이상 80% 이하의 하중용 HOIST		
주 위 온 도		-10 ~ 40℃ 이내		
방 폭 구 조 사 용 유 무		□ 유 ☒ 무		

산업재해예방 안전보건공단
KOREA OCCUPATIONAL SAFETY & HEALTH AGENCY
192.168.11.76 / 2014-04-19 09:48:43

불법복제 및 배포금지

1) 기　　계

심사필
KCS
한국산업안전보건공단

산업재해예방
안전보건공단
KOREA OCCUPATIONAL SAFETY & HEALTH AGENCY

192.168.11.76 / 2014-04-19 09:48:43

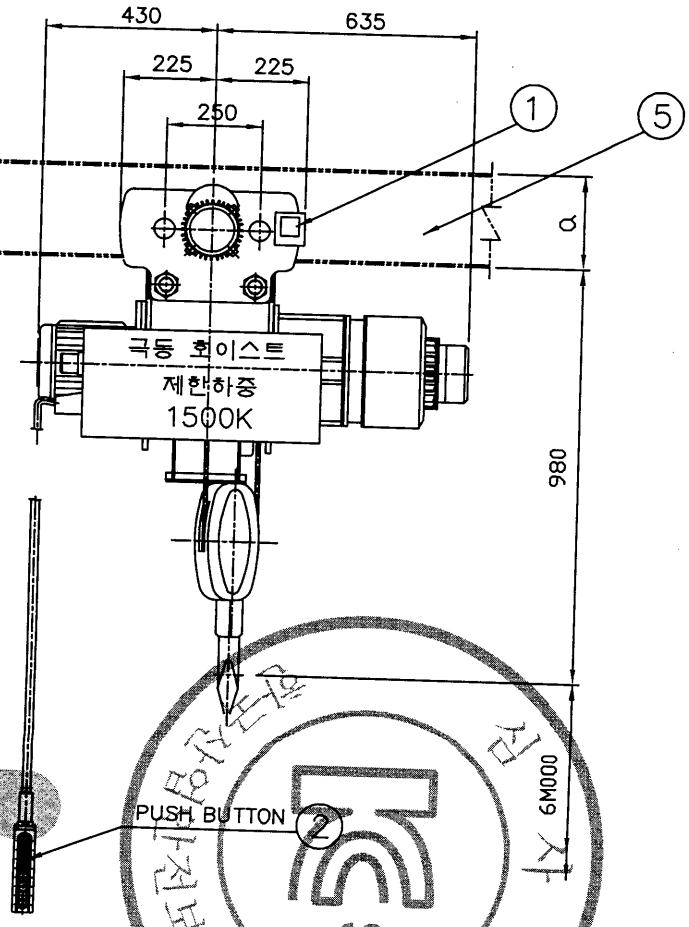

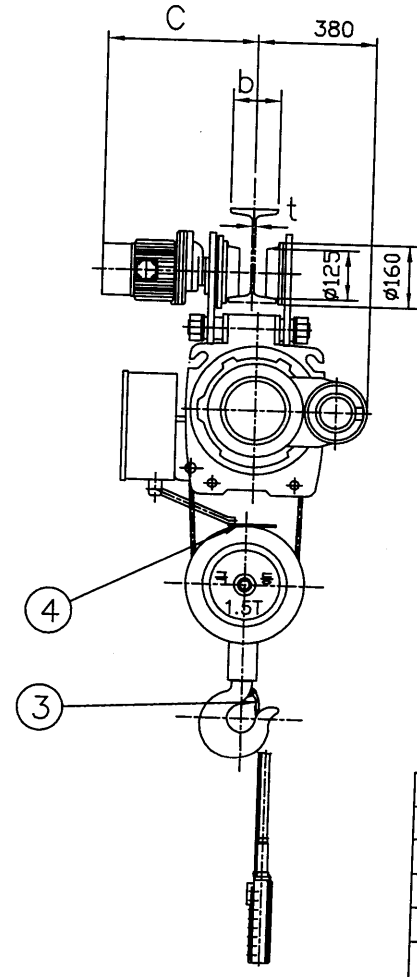

SPECIFICATION			
RATED LOAD			1500 KG
TESTING LOAD			1875 KG
LIFT			6 M
RATING			30 MIN
HOISTING	SPEED		10 / 1.0 M/MIN
	MOTOR		3.7 / 0.4 KW x 4 P
TRAVERSING	HIGH	SPEED	24 M/MIN
		MOTOR	0.75 KW x 4 P
	LOW	SPEED	16 M/MIN
		MOTOR	0.5 KW x 6 P
	DUAL HIGH	SPEED	24/12 M/MIN
		MOTOR	0.8/0.4 KW x 4/8 P
	DUAL LOW	SPEED	16/8 M/MIN
		MOTOR	0.5/0.25 KW x 6/12 P
WIRE ROPE			(6x37) ø10 x 2 FALLS
			STAINLESS STEEL (7x19) ø10(3/8") x 2 FALLS
POWER SOURCE			AC3ø 220V(380,440,460,480) 60Hz
COLOR			10 B 3/5
WEIGHT			320 KG

TRAVERSING I - BEAM A x B x t	Ix (Cm⁴)	Zx (Cm³)	SUPPORT LENGTH	C
I 250 x 125 x 7.5	5180	415	MAX. 4.5M	450
I 300 x 150 x 10	12700	849	MAX. 7.1M	465
I 350 x 150 x 9	15200	871	MAX. 7.8M	465
I 400 x 150 x 10	24100	1220	MAX. 9.8M	465
I 450 x 175 x 11	39200	1740	MAX. 12.5M	475

NO.	DESCRIPTION	MT'L	SUB QTY	TOTAL QTY	SUB WEIGHT(Kg)	TOTAL WEIGHT(Kg)	REMARKS.
5	I-BEAM	SS400			—		TABLE 참조
4	UPPER LIMIT S/W	SS400			1		
3	SAFETY LATCH	SPC			1		
2	EMERGENCY S/W	—			1		
1	LOAD LIMITER	—			1		

PROJECT		DATE	DIM
			mm
TITLE	KDC1.5 – L6 – M ARRANGEMENT DRAWING FOR HOIST	SCALE	PROJECTION
		A3/15	3rd
DRAWN / DESIGNED / CHECKED / APPROVED		REF. DRAWING	

극동호이스트 주식회사
KUK DONG HOIST CO., LTD.

SHEET No.	DWG No.
	KDC1.5M600

산업안전보건연구원
KOREA OCCUPATIONAL SAFETY & HEALTH AGENCY
192.168.11.76 / 2014-04-19 09:49:48
무단복제 및 배포금지

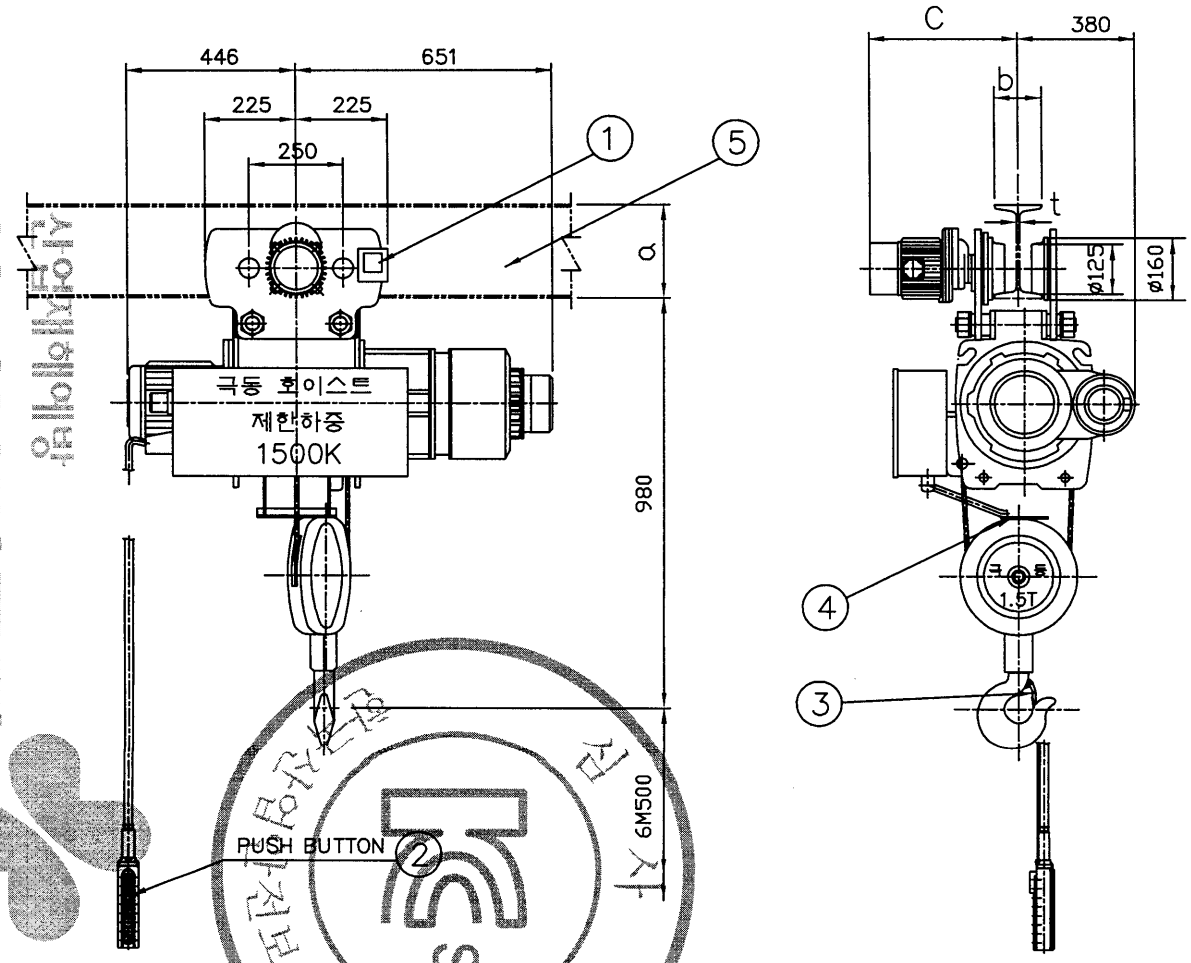

SPECIFICATION			
RATED LOAD		1500	KG
TESTING LOAD		1875	KG
LIFT		6.5	M
RATING		30	MIN
HOISTING	SPEED	10 / 1.0	M/MIN
	MOTOR	3.7 / 0.4 KW x 4 P	
TRAVERSING	HIGH SPEED	24	M/MIN
	HIGH MOTOR	0.75 KW x 4 P	
	LOW SPEED	16	M/MIN
	LOW MOTOR	0.5 KW x 6 P	
	DUAL HIGH SPEED	24/12	M/MIN
	DUAL HIGH MOTOR	0.8/0.4 KW x 4/8 P	
	DUAL LOW SPEED	16/8	M/MIN
	DUAL LOW MOTOR	0.5/0.25 KW x 6/12 P	
WIRE ROPE		(6x37) ø10 x 2 FALLS	
		STAINLESS STEEL (7x19) ø10(3/8") x 2 FALLS	
POWER SOURCE		AC3ø 220V(380,440,460,480) 60Hz	
COLOR		10 B 3/5	
WEIGHT		320	KG

TRAVERSING I – BEAM A x B x t	Ix (Cm⁴)	Zx (Cm³)	SUPPORT LENGTH	C
I 250 x 125 x 7.5	5180	415	MAX. 4.5M	450
I 300 x 150 x 10	12700	849	MAX. 7.1M	465
I 350 x 150 x 9	15200	871	MAX. 7.8M	465
I 400 x 150 x 10	24100	1220	MAX. 9.8M	465
I 450 x 175 x 11	39200	1740	MAX. 12.5M	475

NO.	DESCRIPTION	MT'L	SUB QT'Y	TOTAL QT'Y	SUB WEIGHT(Kg)	TOTAL WEIGHT(Kg)	REMARKS.
5	I-BEAM	SS400			—		TABLE 참조
4	UPPER LIMIT S/W	SS400			1		
3	SAFETY LATCH	SPC			1		
2	EMERGENCY S/W	—			1		
1	LOAD LIMITER	—			1		

PROJECT		DATE	DIM
			mm
TITLE	KDC1.5 – L6.5 – M ARRANGEMENT DRAWING FOR HOIST	SCALE	PROJECTION
		A3/15	3rd

DRAWN	DESIGNED	CHECKED	APPROVED	REF. DRAWING

극동호이스트 주식회사
KUK DONG HOIST CO., LTD.

SHEET No.

DWG No. KDC1.5M650

무단배포금지
KOREA OCCUPATIONAL SAFETY & HEALTH AGENCY
192.168.11.76 / 2014-04-19 09:49:43

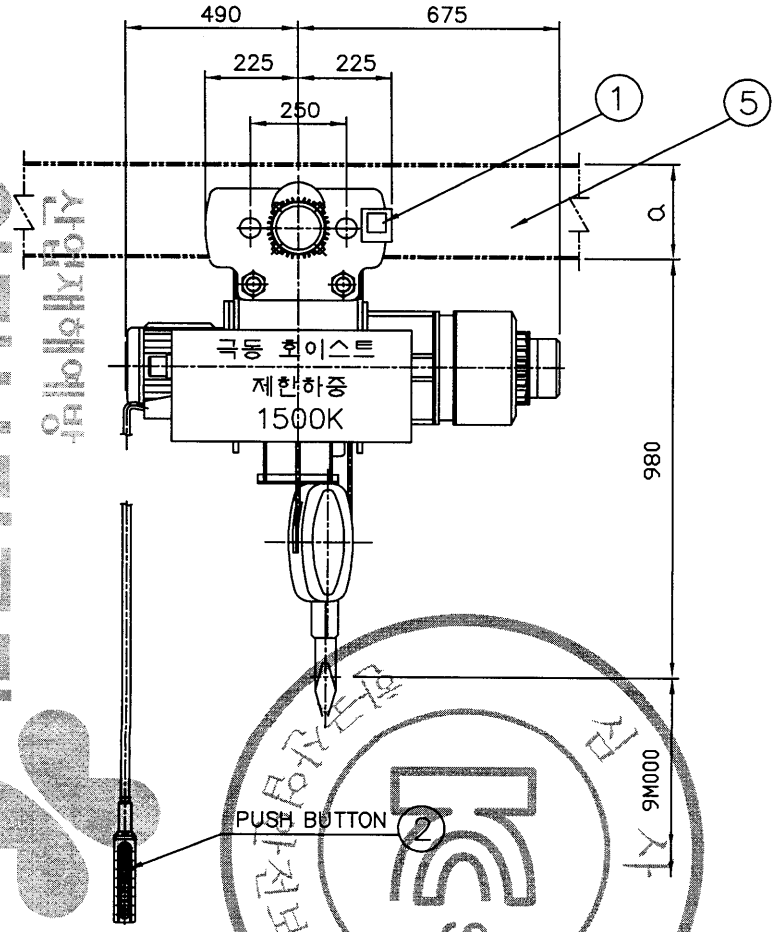

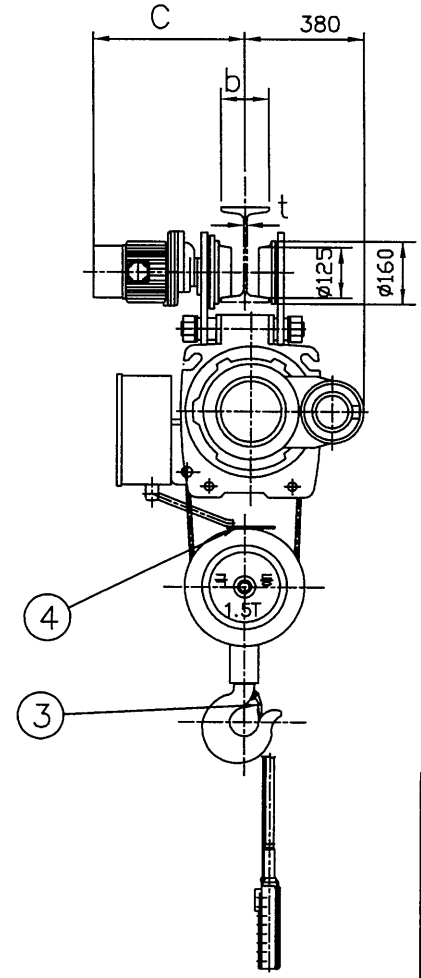

SPECIFICATION				
RATED LOAD			1500	KG
TESTING LOAD			1875	KG
LIFT			9	M
RATING			30	MIN
HOISTING	SPEED		10 / 1.0	M/MIN
	MOTOR		3.7 / 0.4 KW x 4 P	
TRAVERSING	HIGH	SPEED	24	M/MIN
		MOTOR	0.75 KW x 4 P	
	LOW	SPEED	16	M/MIN
		MOTOR	0.5 KW x 6 P	
	DUAL HIGH	SPEED	24/12	M/MIN
		MOTOR	0.8/0.4 KW x 4/8 P	
	DUAL LOW	SPEED	16/8	M/MIN
		MOTOR	0.5/0.25 KW x 6/12 P	
WIRE ROPE			(6x37) ø10 x 2 FALLS	
			STAINLESS STEEL (7x19) ø10(3/8") x 2 FALLS	
POWER SOURCE			AC3ø 220V(380,440,460,480) 60Hz	
COLOR			10 B 3/5	
WEIGHT			360	KG

TRAVERSING I — BEAM A x B x t	Ix (Cm⁴)	Zx (Cm³)	SUPPORT LENGTH	C
I 250 x 125 x 7.5	5180	415	MAX. 4.5M	450
I 300 x 150 x 10	12700	849	MAX. 7.1M	465
I 350 x 150 x 9	15200	871	MAX. 7.8M	465
I 400 x 150 x 10	24100	1220	MAX. 9.8M	465
I 450 x 175 x 11	39200	1740	MAX. 12.5M	475

NO.	DESCRIPTION	MT'L	SUB QTY	TOTAL QTY	SUB WEIGHT(Kg)	TOTAL WEIGHT(Kg)	REMARKS.
5	I-BEAM	SS400			—		TABLE 참조
4	UPPER LIMIT S/W	SS400			1		
3	SAFETY LATCH	SPC			1		
2	EMERGENCY S/W	—			1		
1	LOAD LIMITER	—			1		

PROJECT				DATE	DIM
					mm
TITLE	KDC1.5 — L9 — M			SCALE	PROJECTION
	ARRANGEMENT DRAWING FOR HOIST			A3/15	3rd
DRAWN	DESIGNED	CHECKED	APPROVED	REF. DRAWING	

극동호이스트 주식회사
KUK DONG HOIST CO., LTD.

SHEET No.

DWG No.
KDC1.5M900

산업재해예방 산업안전보건공단
KOREA OCCUPATIONAL SAFETY & HEALTH AGENCY
192.168.11.76 / 2014-04-19 09:49:43
본 도면은 배포 및 제 3 자에 누설 금지

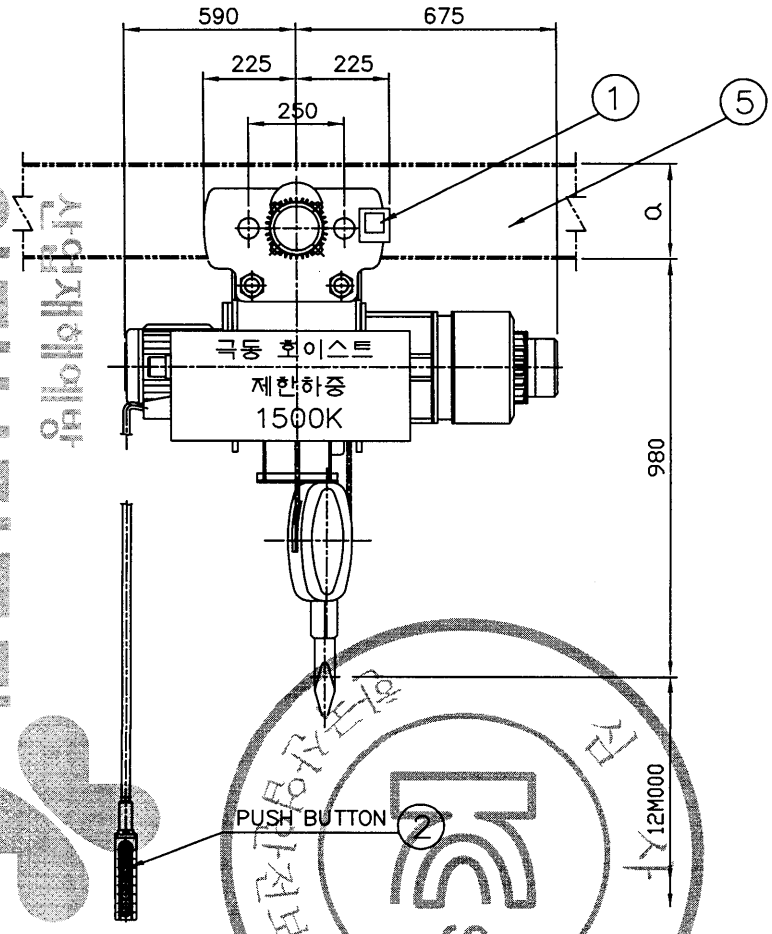

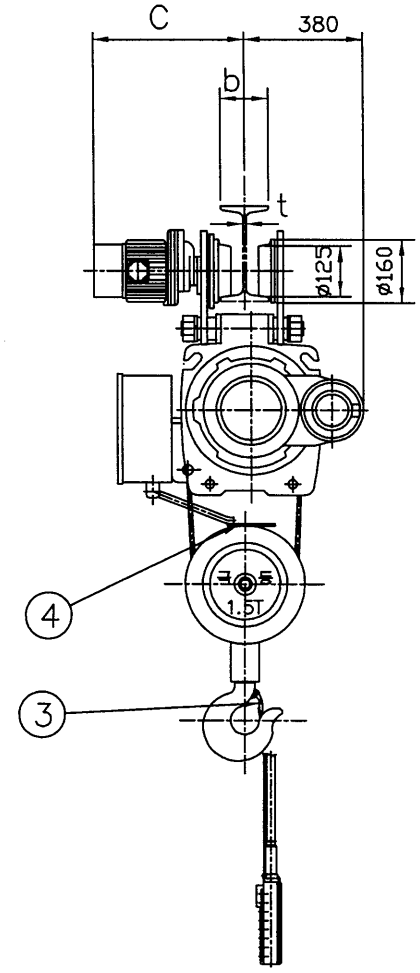

SPECIFICATION			
RATED LOAD		1500	KG
TESTING LOAD		1875	KG
LIFT		12	M
RATING		30	MIN
HOISTING	SPEED	10 / 1.0	M/MIN
	MOTOR	3.7 / 0.4	KW x 4 P
TRAVERSING	HIGH SPEED	24	M/MIN
	HIGH MOTOR	0.75	KW x 4 P
	LOW SPEED	16	M/MIN
	LOW MOTOR	0.5	KW x 6 P
	DUAL HIGH SPEED	24/12	M/MIN
	DUAL HIGH MOTOR	0.8/0.4	KW x 4/8 P
	DUAL LOW SPEED	16/8	M/MIN
	DUAL LOW MOTOR	0.5/0.25	KW x 6/12 P
WIRE ROPE		(6x37) ø10 x 2 FALLS	
		STAINLESS STEEL (7x19) ø10(3/8") x 2 FALLS	
POWER SOURCE		AC3ø 220V(380,440,460,480) 60Hz	
COLOR		10 B 3/5	
WEIGHT		380	KG

TRAVERSING I – BEAM A x B x t	Ix (Cm⁴)	Zx (Cm³)	SUPPORT LENGTH	C
I 250 x 125 x 7.5	5180	415	MAX. 4.5M	450
I 300 x 150 x 10	12700	849	MAX. 7.1M	465
I 350 x 150 x 9	15200	871	MAX. 7.8M	465
I 400 x 150 x 10	24100	1220	MAX. 9.8M	465
I 450 x 175 x 11	39200	1740	MAX. 12.5M	475

NO.	DESCRIPTION	MT'L	SUB QT'Y	TOTAL QT'Y	SUB WEIGHT(Kg)	TOTAL WEIGHT(Kg)	REMARKS.
5	I-BEAM	SS400			—		TABLE 참조
4	UPPER LIMIT S/W	SS400			1		
3	SAFETY LATCH	SPC			1		
2	EMERGENCY S/W	—			1		
1	LOAD LIMITER	—			1		

PROJECT				DATE	DIM
					mm
TITLE	KDC1.5 – L12 – M ARRANGEMENT DRAWING FOR HOIST			SCALE	PROJECTION
				A3/15	3rd
DRAWN	DESIGNED	CHECKED	APPROVED	REF. DRAWING	

극동호이스트 주식회사
KUK DONG HOIST CO., LTD.

SHEET No.

DWG No. KDC1.5M120

불법복제 및 배포금지

한국산업안전보건공단
KOREA OCCUPATIONAL SAFETY & HEALTH AGENCY
192.168.11.76 / 2014-04-19 09:49:48

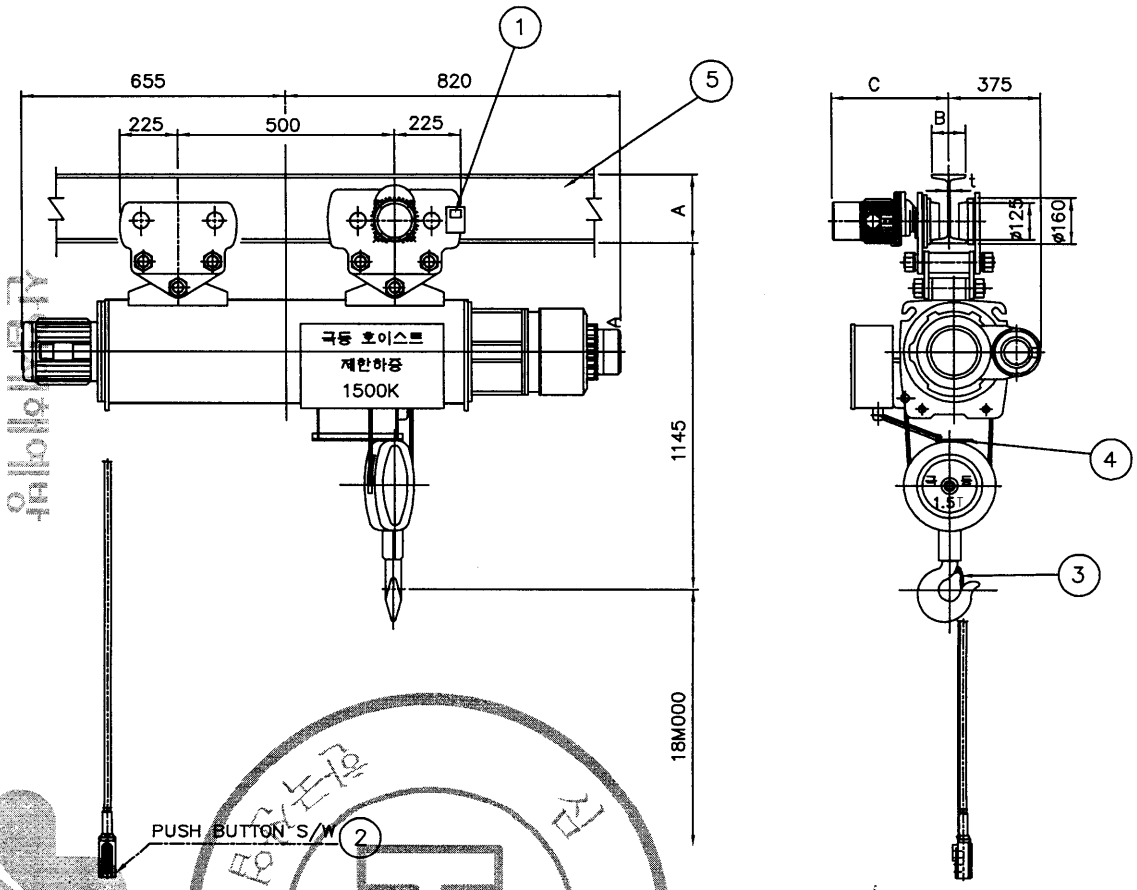

SPECIFICATION			
RATED LOAD		1500 KG	
TESTING LOAD		1875 KG	
LIFT		18 M	
RATING		30 MIN	
HOISTING	SPEED	10 / 1.0 M/MIN	
	MOTOR	3.7 / 0.4 KW x 4 P	
TRAVERSING	HIGH	SPEED	24 M/MIN
		MOTOR	0.75 KW x 4 P
	LOW	SPEED	16 M/MIN
		MOTOR	0.5 KW x 6 P
	DUAL HIGH	SPEED	24/12 M/MIN
		MOTOR	0.8/0.4 KW x 4/8 P
	DUAL LOW	SPEED	16/8 M/MIN
		MOTOR	0.5/0.25 KW x 6/12 P
WIRE ROPE		(6x37) ø10 x 2 FALLS	
		STAINLESS STEEL (7x19) ø10(3/8") x 2 FALLS	
POWER SOURCE		AC3ø 220V(380,440,460,480) 60Hz	
COLOR		10 B 3/5	
WEIGHT		438 KG	

TRAVERSING I — BEAM A x B x t	Ix (Cm⁴)	Zx (Cm³)	SUPPORT LENGTH	C
I 250 x 125 x 7.5	5180	415	MAX. 4.5M	450
I 300 x 150 x 10	12700	849	MAX. 7.1M	465
I 350 x 150 x 9	15200	871	MAX. 7.8M	465
I 400 x 150 x 10	24100	1220	MAX. 9.8M	465
I 450 x 175 x 11	39200	1740	MAX. 12.5M	475

NO.	DESCRIPTION	MT'L	SUB QTY	TOTAL QTY	SUB WEIGHT(Kg)	TOTAL WEIGHT(Kg)	REMARKS.
5	I-BEAM	SS400		–			테이블 참조
4	UPPER LIMIT S/W	SS400		1			
3	SAFETY LATCH	SPC		1			
2	PENDANT S/W	–		1			
1	LOAD LIMITER	–		1			

PROJECT		DATE	DIM
			mm
TITLE	KDC1.5-L18-M ARRANGEMENT DRAWING FOR HOIST	SCALE	PROJECTION
		A3/20	3rd

DRAWN	DESIGNED	CHECKED	APPROVED	REF. DRAWING

극동호이스트 주식회사
KUK DONG HOIST CO., LTD.

SHEET No.

DWG No. KDC1.5 – 1800

불법복제 및 배포금지
192.168.11.76 / 2014-04-19 09:49:43
한국산업안전보건공단
KOREA OCCUPATIONAL SAFETY & HEALTH AGENCY
사본임에 틀림없음
검사

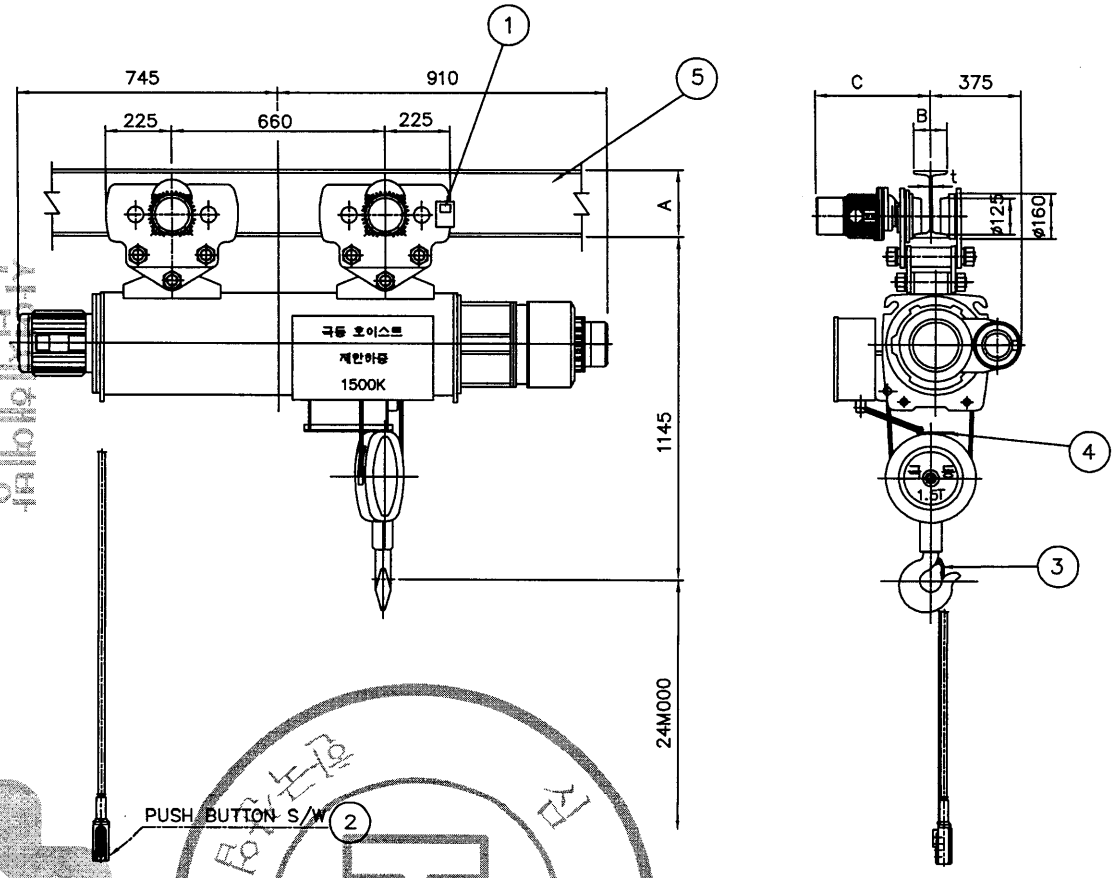

SPECIFICATION			
RATED LOAD			2000 KG
TESTING LOAD			2500 KG
LIFT			24 M
RATING			30 MIN
HOISTING	SPEED		10/1.0 M/MIN
	MOTOR		3.7/0.4 KW x 4 P
TRAVERSING	HIGH	SPEED	24 M/MIN
		MOTOR	0.75KW x 4 P (2UNITS)
	LOW	SPEED	16 M/MIN
		MOTOR	0.5 KW x 6 P (2UNITS)
	DUAL HIGH	SPEED	24/12 M/MIN
		MOTOR	0.8/0.4 KW x 4/8P (2UNITS)
	DUAL LOW	SPEED	16/8 M/MIN
		MOTOR	0.5/0.25 KW x 6/12P(2UNITS)
WIRE ROPE			(6x37) 10 x 2 FALLS
			STAINLESS STEEL (7x19) ø10(3/8") x 2 FALLS
POWER SOURCE			AC3ø 220V(380,440,460,480) 60Hz
COLOR			10 B 3/5
WEIGHT			495 KG

TRAVERSING I – BEAM A x B x t	Ix (Cm⁴)	Zx (Cm³)	SUPPORT LENGTH	C
I 250 x 125 x 7.5	5180	415	MAX. 4.5M	445
I 300 x 150 x 10	12700	849	MAX. 7.1M	465
I 350 x 150 x 9	15200	871	MAX. 7.8M	465
I 400 x 150 x 10	24100	1220	MAX. 9.8M	465
I 450 x 175 x 11	39200	1740	MAX. 12.5M	475

NO.	DESCRIPTION	MT'L	SUB QT'Y	TOTAL QT'Y	SUB WEIGHT(Kg)	TOTAL WEIGHT(Kg)	REMARKS.
5	I-BEAM	SS400		–			TABLE 참조
4	UPPER LIMIT S/W	SS400		1			
3	SAFETY LATCH	SPC		1			
2	PENDANT S/W	–		1			
1	LOAD LIMITER	–		1			

PROJECT				DATE	DIM
					mm
TITLE	KDC1.5–L24–M ARRANGEMENT DRAWING FOR HOIST			SCALE	PROJECTION
				A3/20	3rd
DRAWN	DESIGNED	CHECKED	APPROVED	REF. DRAWING	

극동호이스트 주식회사
KUK DONG HOIST CO., LTD.

SHEET No.

DWG No. KDC1.5 – 2400

192.168.11.76 / 2014-04-19 09:49:43
한국산업안전보건공단
KOREA OCCUPATIONAL SAFETY & HEALTH AGENCY
인쇄하여 사용하시기 바랍니다.
본 사 제 품 배 포 금 지

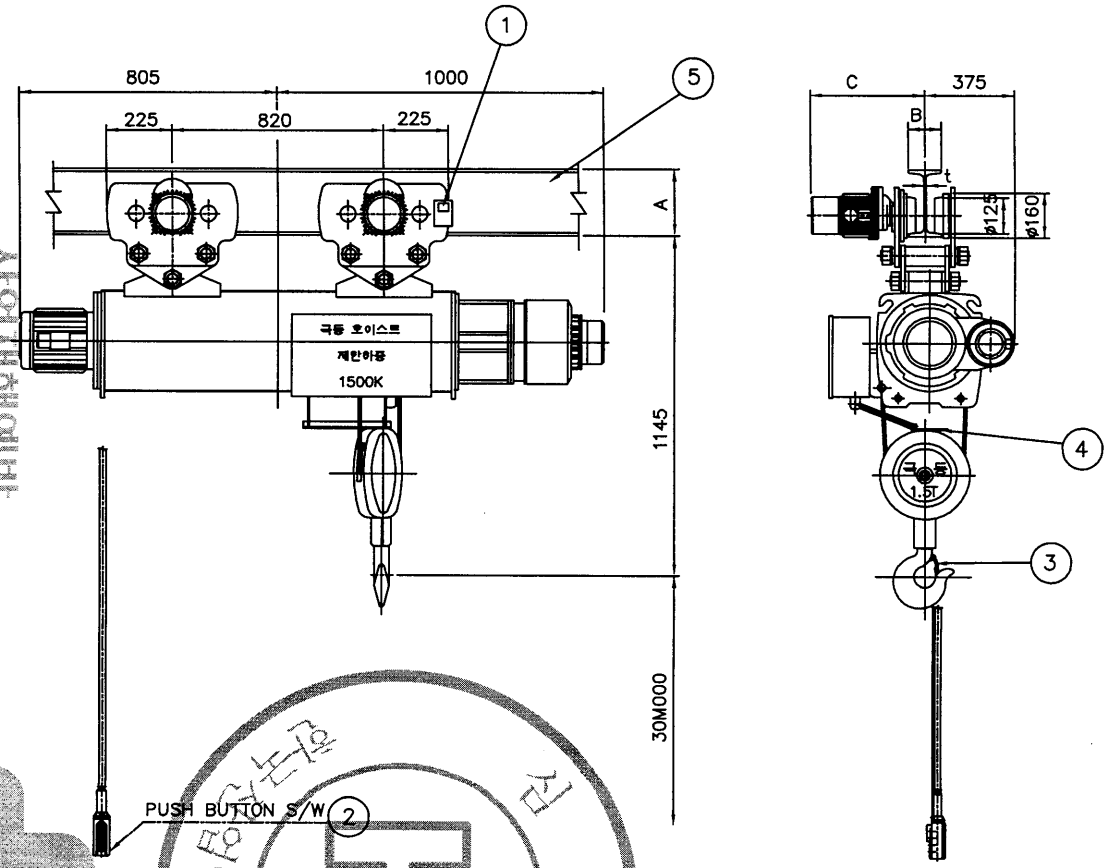

SPECIFICATION			
RATED LOAD			2000 KG
TESTING LOAD			2500 KG
LIFT			30 M
RATING			30 MIN
HOISTING	SPEED		10/1.0 M/MIN
	MOTOR		3.7/0.4 KW x 4 P
TRAVERSING	HIGH	SPEED	24 M/MIN
		MOTOR	0.75KW x 4 P (2UNITS)
	LOW	SPEED	16 M/MIN
		MOTOR	0.5 KW x 6 P (2UNITS)
	DUAL HIGH	SPEED	24/12 M/MIN
		MOTOR	0.8/0.4 KW x 4/8P (2UNITS)
	DUAL LOW	SPEED	16/8 M/MIN
		MOTOR	0.5/0.25 KW x 6/12P(2UNITS)
WIRE ROPE			(6x37) 10 x 2 FALLS
			STAINLESS STEEL (7x19) ø10(3/8") x 2 FALLS
POWER SOURCE			AC3ø 220V(380,440,460,480) 60Hz
COLOR			10 B 3/5
WEIGHT			525 KG

TRAVERSING I – BEAM A x B x t	Ix (Cm⁴)	Zx (Cm³)	SUPPORT LENGTH	C
I 250 x 125 x 7.5	5180	415	MAX. 4.5M	445
I 300 x 150 x 10	12700	849	MAX. 7.1M	465
I 350 x 150 x 9	15200	871	MAX. 7.8M	465
I 400 x 150 x 10	24100	1220	MAX. 9.8M	465
I 450 x 175 x 11	39200	1740	MAX. 12.5M	475

NO.	DESCRIPTION	MT'L	SUB QT'Y	TOTAL QT'Y	SUB WEIGHT(Kg)	TOTAL WEIGHT(Kg)	REMARKS.
5	I-BEAM	SS400		–			TABLE 참조
4	UPPER LIMIT S/W	SS400		1			
3	SAFETY LATCH	SPC		1			
2	PENDANT S/W	–		1			
1	LOAD LIMITER	–		1			

PROJECT				DATE	DIM
					mm
TITLE	KDC1.5–L30–M ARRANGEMENT DRAWING FOR HOIST			SCALE A3/20	PROJECTION 3rd
DRAWN	DESIGNED	CHECKED	APPROVED	REF. DRAWING	

극동호이스트 주식회사
KUK DONG HOIST CO., LTD.

SHEET No.

DWG No. KDC1.5 – 3000

불법복제 및 배포금지
192.168.11.76 / 2014-04-19 09:49:43
한국안전보건공단
KOREA OCCUPATIONAL SAFETY & HEALTH AGENCY
사업자해외법인
검 사 필

불법복제 및 배포금지

2) 전　　기

심사필
KCS
한국산업안전보건공단

산업재해예방
안전보건공단
KOREA OCCUPATIONAL SAFETY & HEALTH AGENCY

192.168.11.76 / 2014-04-19 09:50:43

불법복제 및 배포금지

ADR'S NO.

KDSM0001

ELECTRICAL SYMBOL LIST

DESCRIPTION	SYMBOLS
3 PHASE SQUIRREL CAGE ROTOR INDUCTION MOTOR	IM
3 PHASE WOUND ROTOR INDUCTION MOTOR	
DC. MAG. BRAKE DISK TYPE	
THRUSTOR BRAKE	B-TH
AC-DC MAG. BRAKE	B-MD
SC BRAKE	B-SC
EC BRAKE	B-EC
RECTIFIER	
LOAD LIMITER ELECTRICAL TYPE	
ELECTRONIC OVER CURRENT RELAY	

DESCRIPTION	SYMBOLS
NO FUSE BREAKER 2 PHASE	
NO FUSE BREAKER 3 PHASE	
EARTH LEAKAGE BREAKER 2 PHASE	
EARTH LEAKAGE BREAKER 3 PHASE	
TRANSFORMER	
CURRENT TRANSFORMER	
POTENTIAL TRANSFORMER	
FUSE	
FUSE WITH CONTACTOR	
THYRISTOR UNIT	

DESCRIPTION	SYMBOLS MAKE	SYMBOLS BREAK
MAGNETIC & RELAY CONTACTOR		
ON DELAY TIME CONTACTOR		
OFF DELAY TIME CONTACTOR		
EOCR OR THERMAL RELAY CONTACTOR		
THERMOSTAT		
LIMIT SWITCH		
PUSHBUTTON SWITCH		
EMERGENCY PUSHBUTTON SWITCH		
KEY SWITCH		
FOOT SWITCH		

DESCRIPTION	SYMBOLS MAKE	SYMBOLS BREAK
PUSHBUTTON SWITCH 1BUTTON 2STEP TYPE		
TOGGLE SWITCH OR SELLECTOR SWITCH		

MK	DATE	REVISIONS	CHK.	APP.
4				
3				
2				
1				

CUSTOMER		DRAWING	DESIGN	CHECKED	APPROVED	SCALE	DATE	ORDER NO.
DRAWING TITLE	SYMBOL LIST 1/2					NONE		
		KD 국동호이스트 주식회사 KUK DONG HOIST CO., LTD.				DWG. NO	KDSM0001	

KOREA OCCUPATIONAL SAFETY & HEALTH AGENCY
192.168.11.76 / 2014-04-19 09:50:43

불법복제 및 배포금지

ADR'S NO.

KDSM0002

ELECTRICAL SYMBOL LIST

DESCRIPTION	SYMBOLS
WIRE INTERNAL TO ENCLOSURE	
WIRE EXTERNAL TO ENCLOSURE	
WIRE NOT CONNECTED	
WIRE CONNECTED	
TERMINAL	
GROUND (EARTH)	
PLUG & RECEPTACLE	
MAGNETIC CONTACTOR COIL	M
AUX. RELAY COIL	CR
TIMER COIL	T

DESCRIPTION	SYMBOLS
CONTROLLER OR REMOTE CONTROLLER CONTACTOR	
UPPER LIMIT SWITCH (LS-II)	
THERMAL RELAY	
PILOT(SIGNAL) LAMP	
ROTARY LAMP	
WARING SIREN	
BUZZER	
AMMETER	A AC / A DC
VOLT METER	V AC / V DC
FLUORENCE LAMP	

DESCRIPTION	SYMBOLS
SOLENOID COIL	
RESISTER	
VARIABLE RESISTOR	
SLIP RING	
CABLE REEL	
SPACE HEATER	
SURGE ABSORBER	
LOAD CELL	
BALLAST WITH RECEPTACLE	
FAN	

DESCRIPTION	SYMBOLS
FLOOD LIGHTING	
RECEPTACLE	

MK	DATE	REVISIONS	CHK.	APP.
4				
3				
2				
1				

CUSTOMER		DRAWING	DESIGN	CHECKED	APPROVED	SCALE	DATE	ORDER NO.
DRAWING TITLE	SYMBOL LIST 2/2					NONE		
		극동호이스트 주식회사 KUK DONG HOIST CO., LTD.				DWG. NO	KDSM0002	

192.168.11.76 / 2014-04-19 09:50:43
KOREA OCCUPATIONAL SAFETY & HEALTH AGENCY
한국산업안전보건공단
한국산업안전보건공단 서울지사

ELECTRICAL SPECIFICATION

. POWER SOURCE : AC 3Φ 220V, 380V, 440V ,460V,480V 60Hz
. CONTROL SOURCE : AC 1Φ 110V(120V) 60Hz

OBJECT		MOTOR OUTPUT	220V		380V		440V	460V	480V	440,460,480V	BRAKE	REMARK
			STATOR CURRENT	1st CABLE SIZE	STATOR CURRENT	1st CABLE SIZE	STATOR CURRENT	STATOR CURRENT	STATOR CURRENT	1st CABLE SIZE		
MAIN HOIST		3.7KW x 4P 30 MIN	16.00 A	4.0 sq	9.30 A	4.0 sq	8.0 A	7.7 A	7.3 A	4.0 sq	DC MAG. BRAKE	
CREEP HOIST		0.4KW x 4P 30 MIN	2.70 A	4.0 sq	1.60 A	4.0 sq	1.4 A	1.3 A	1.2 A	4.0 sq	DC MAG. BRAKE	
TRAVERSING	HIGH	0.75KW x 4P 30 MIN	4.10 A	4.0 sq	2.40 A	4.0 sq	2.00 A	2.00 A	1.90 A	4.0 sq	DC MAG. BRAKE	1 DRIVE
	LOW	0.5KW x 6P 30 MIN	3.40 A	4.0 sq	2.00 A	4.0 sq	1.70 A	1.70 A	1.60 A	4.0 sq	DC MAG. BRAKE	1 DRIVE
CONTROL CIRCUIT			2 A	2.5 sq	2 A	2.5 sq	2 A	2 A	2 A	2.5 sq		
LIGHTING & ACC'Y CIRCUIT												
SUB TOTAL (PEAK LOAD)	HIGH		22.10 A	6.0 sq	13.70 A	4.0 sq	12.00 A	11.70 A	11.20 A	4.0 sq	I(A)=M/H + T/S + ASS'Y	
SUB TOTAL (NORMAL LOAD)	LOW		21.40 A	6.0 sq	13.30 A	4.0 sq	11.70 A	11.40 A	10.90 A	4.0 sq	I(A)=M/H + T/S + ASS'Y	

*. 위 계산은 HIGH(MAX.)일때와 LOW(MIN.)일때만 계산한것임.
*. 위 계산은 LIFT 6(6.5,9,12,18)M에 적용.

192.168.11.76 / 2014-04-19 09:50:43

불법복제 및 배포금지

ELECTRICAL SPECIFICATION

. POWER SOURCE : AC 3Φ 220V, 380V, 440V ,460V,480V 60Hz
. CONTROL SOURCE : AC 1Φ 110V(120V) 60Hz

OBJECT		MOTOR OUTPUT	220V		380V		440V	460V	480V	440,460,480V	BRAKE	REMARK
			STATOR CURRENT	1st CABLE SIZE	STATOR CURRENT	1st CABLE SIZE	STATOR CURRENT	STATOR CURRENT	STATOR CURRENT	1st CABLE SIZE		
MAIN HOIST		3.7KW x 4P 30 MIN	16.00 A	4.0 sq	9.30 A	4.0 sq	8.0 A	7.7 A	7.3 A	4.0 sq	DC MAG. BRAKE	
CREEP HOIST		0.4KW x 4P 30 MIN	2.70 A	4.0 sq	1.60 A	4.0 sq	1.4 A	1.3 A	1.2 A	4.0 sq	DC MAG. BRAKE	
TRAVERSING	HIGH	0.75KW x 4P 30 MIN	(4.1*2)A	4.0 sq	(2.4*2)A	4.0 sq	(2.0*2)A	(2.0*2)A	(1.9*2)A	4.0 sq	DC MAG. BRAKE	2 DRIVE
	LOW	0.5KW x 6P 30 MIN	(3.4*2)A	4.0 sq	(2.0*2)A	4.0 sq	(1.7*2)A	(1.7*2)A	(1.6*2)A	4.0 sq	DC MAG. BRAKE	2 DRIVE
CONTROL CIRCUIT			2 A	2.5 sq	2 A	2.5 sq	2 A	2 A	2 A	2.5 sq		
LIGHTING & ACC'Y CIRCUIT												
SUB TOTAL (PEAK LOAD)	HIGH		26.20 A	6.0 sq	16.10 A	4.0 sq	14.00 A	13.70 A	13.10 A	4.0 sq	I(A)=M/H + T/S + ASS'Y	
SUB TOTAL (NORMAL LOAD)	LOW		24.80 A	6.0 sq	15.30 A	4.0 sq	13.40 A	13.10 A	12.50 A	4.0 sq	I(A)=M/H + T/S + ASS'Y	

*. 위 계산은 HIGH(MAX.)일때와 LOW(MIN.)일때만 계산한것임.
*. 위 계산은 LIFT 24,30M에 적용.

192.168.11.76 / 2014-04-19 09:50:43

불법복제 및 배포금지

불법복제 및 배포금지

▣ 보호본딩회로의 연속성 확인

시험전선의 최소유효 단면적(㎟)	최고 전압 강하(V)
1.0	3.3
1.5	2.6
2.5	1.9
4.0	1.4
>6.0	1.0

①보호본딩회로의 연속성의 검증은 PELV전원(50/60Hz)에서 최소 10A 이상의 전류를 10초 이상의 인가에 의한다. 시험은 PE단자와 보호본딩회로의 여러지점 사이에서 이루어진다.

②PE단자와 시험 지점 사이에서 측정된 전압은(표 참조) 값을 초과 해서는 아니된다.

▣ 절연저항 시험

전원선과 보호본딩선 사이를 직류 500V로 측정한 절연저항 값은 1MΩ 이상이어야 한다.

▣ 내전압 시험

①PELV 전압에서 작동되도록 설계된 전기장치의 회로를 제외한 모든 회로와 보호본딩회로의 전선 사이에 1초 이상 지속되는 다음의 시험 전압에 견딜수 있어야 한다.

- 장치의 정격전압의 두배 또는 1,000V 중 큰값의 전압

②이 시험을 견딜수 없도록 설계된 부품은 시험이 진행되기 전에 차단하여야 한다.

산업재해예방 안전보건공단
KOREA OCCUPATIONAL SAFETY & HEALTH AGENCY
192.168.11.76 / 2014-04-19 09:50:43

불법복제 및 배포금지

KDC2-EC001

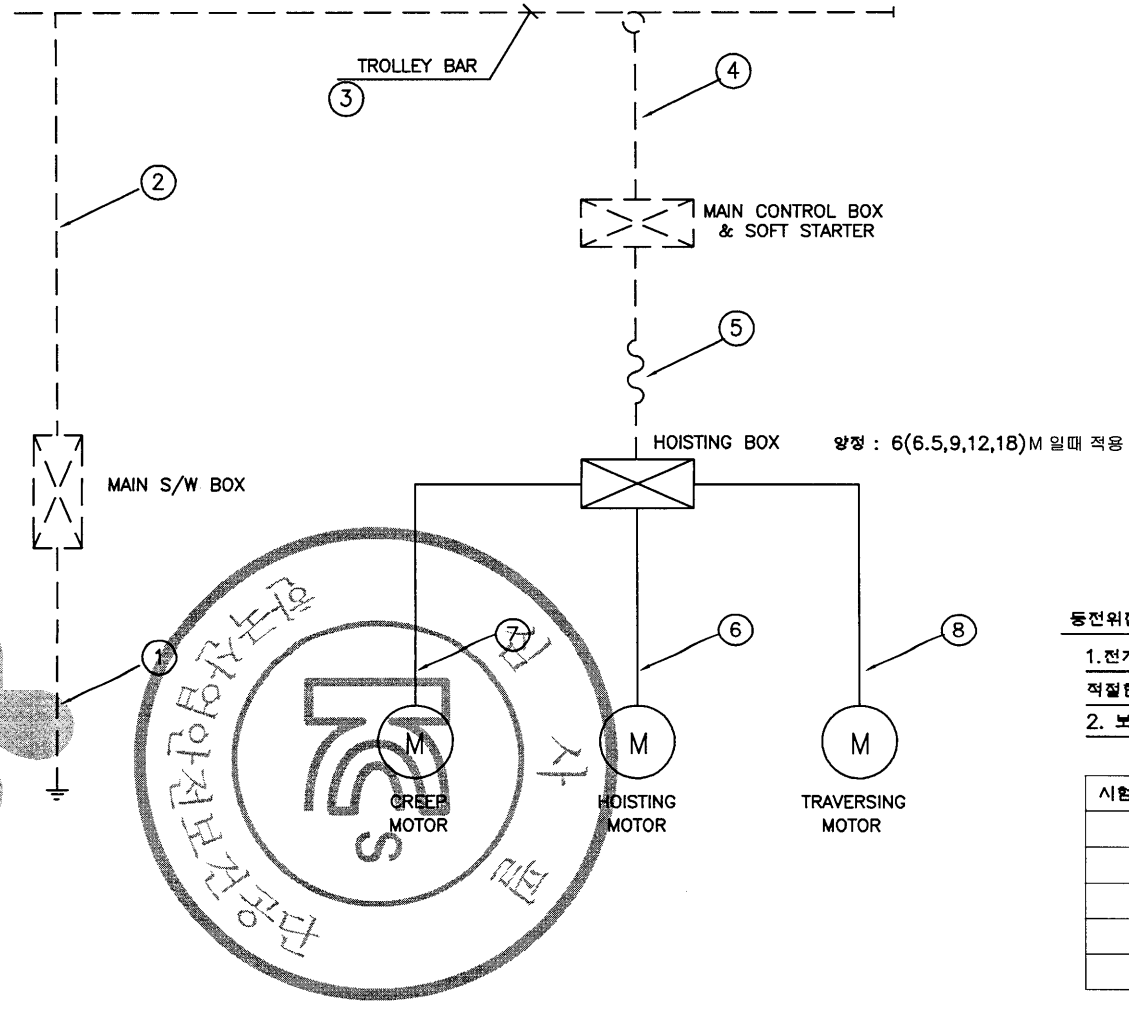

NO	DESCRIPTION	CABLE SIZE
1	MAIN EARTH LINE	USER SCOPE
2	POWER SOURCE	USER SCOPE
3	TROLLEY BAR	USER SCOPE
4	POWER SOURCE WITH EARTH	USER SCOPE
5	HOIST POWER SOURCE WITH EARTH	VFCT 6.0SQ x 1C
6	HOISTING MOTOR WITH EARTH	VCT 4.0SQ x 1C
7	CREEP MOTOR WITH EARTH	VCT 4.0SQ x 1C
8	TRAVERSING MOTOR WITH EARTH	VCT 4.0SQ x 1C

** CV CABLE 4C중 1C는 EARTH로 사용함.*

– NOTE –

1. 전동기 외함, 제어반의 프레임 등은 접지하여 그 접지 저항은

400V 미만 : 100오옴 이하일것.(3종 접지)
400V 이상 : 10오옴 이하일것.(특 3종접지)

2.MAIN S/W BOX는 3종 접지 요.

— — — — USER SCOPE

———— KUKDONG SCOPE

등전위접지

1.전기장비와 기계의 노출된 모든 도전부는 보호본딩회로에 연결되어야 하며 적절한 접지연속성 기능이 유지되야함.

2. 보호본딩회로에는 개폐기, 과전류보호장치가 부착되지 않아야 한다.

시험대상 전선의 최소 유효단면적	최고전압강하(V)
1.0	3.3
1.5	2.6
2.5	1.6
4.0	1.4
>6.0	1.0

MK	DATE	REVISIONS	CHK.	APP.
4				
3				
2				
1				

CUSTOMER		DRAWING	DESIGN	CHECKED	APPROVED	SCALE	DATE	ORDER NO.
DRAWING TITLE	EARTH DETAILS DRAWING					NONE	2014.03.28	
		극동호이스트 주식회사 KUK DONG HOIST CO., LTD.				DWG. NO	KDC2-EC001	

산업재해예방
한국산업안전보건공단
KOREA OCCUPATIONAL SAFETY & HEALTH AGENCY
192.168.11.76 / 2014-04-19 00:50:43

KD2-EC002

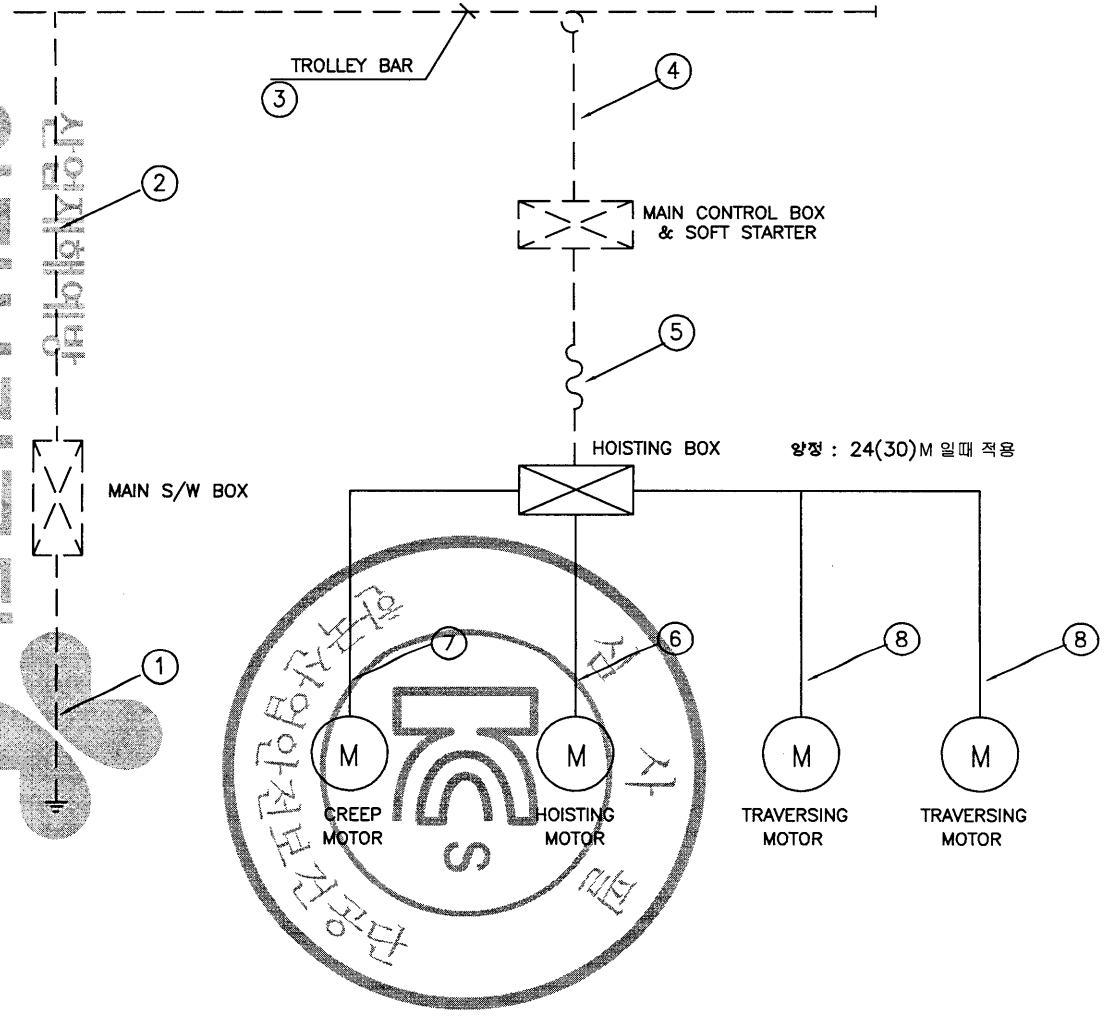

NO	DESCRIPTION	CABLE SIZE
1	MAIN EARTH LINE	USER SCOPE
2	POWER SOURCE	USER SCOPE
3	TROLLEY BAR	USER SCOPE
4	POWER SOURCE WITH EARTH	USER SCOPE
5	HOIST POWER SOURCE WITH EARTH	VFCT 6.0SQ x 1C
6	HOISTING MOTOR WITH EARTH	VCT 4.0SQ x 1C
7	CREEP MOTOR WITH EARTH	VCT 4.0SQ x 1C
8	TRAVERSING MOTOR WITH EARTH	VCT 4.0SQ x 1C

** CV CABLE 4C중 1C는 EARTH로 사용함.*

– NOTE –

1. 전동기 외함, 제어반의 프레임 등은 접지하여 그 접지 저항은

400V 미만 : 100오옴 이하일것.(3종 접지)
400V 이상 : 10오옴 이하일것.(특 3종접지)

2.MAIN S/W BOX는 3종 접지 요.

— — — — USER SCOPE

———— KUKDONG SCOPE

등전위접지

1.전기장비와 기계의 노출된 모든 도전부는 보호본딩회로에 연결되어야 하며 적절한 접지연속성 기능이 유지되야함.

2. 보호본딩회로에는 개폐기, 과전류보호장치가 부착되지 않아야 한다.

시험대상 전선의 최소 유효단면적	최고전압강하(V)
1.0	3.3
1.5	2.6
2.5	1.6
4.0	1.4
>6.0	1.0

MK	DATE	REVISIONS	CHK.	APP.
4				
3				
2				
1				

CUSTOMER		DRAWING	DESIGN	CHECKED	APPROVED	SCALE	DATE	ORDER NO.
DRAWING TITLE	EARTH DETAILS DRAWING					NONE	2003.07.01	
		극동호이스트 주식회사 KUK DONG HOIST CO., LTD.				DWG. NO	KD2-EC002	

KOREA OCCUPATIONAL SAFETY & HEALTH AGENCY
192.168.11.76 / 2014-04-19 09:50:43
불법복제 및 배포금지

1	2	3	4	5	6	7	8	9	10	11	12	13	14	15	16	17	18	19	20
																			ADR'S NO.
																			A4

* MAIN POWER : AC 3PH 220V,380V,440V,440V,480V 60Hz (LIFT 6,9,12,18M)

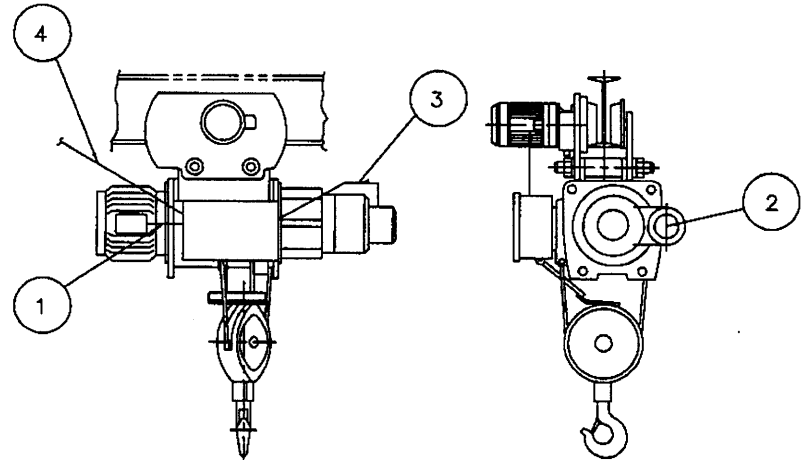

본 도면은 EARTH를 명기하기 위한 도면으로서
실제 배치와 다를 수 있으며 HOIST 본체와의
EARTH용 CABLE은 REFERENCE임

*3종 접지공사 100Ω 이하 (AC 3PH 400V 미만
*특3 종 접지공사 10Ω 이하 (AC 3PH 400V 이상

NO	TYPE	CABLE SIZE 220V	380V	TYPE	440V,460V,480V	REMARK
1	VCT	4.0sq	4.0sq	VCT	4.0sq	HOISTING MOTOR WITH EARTH
2	VCT	4.0sq	4.0sq	VCT	4.0sq	CREEP MOTOR WITH EARTH
3	VCT	4.0sq	4.0sq	VCT	4.0sq	T/S MOTOR WITH EARTH
4	VFCT	6.0sq	4.0sq	VFCT	4.0sq	MAIN POWER WITH EARTH

등전위접지

1.전기장비와 기계의 노출된 모든 도전부는 보호본딩회로에 연결되어야 하며 적절한 접지연속성 기능이 유지되야함.

2. 보호본딩회로에는 개폐기, 과전류보호장치가 부착되지 않아야 한다.

시험대상 전선의 최소 유효단면적	최고전압강하(V)
1.0	3.3
1.5	2.6
2.5	1.6
4.0	1.4
>6.0	1.0

MK	DATE	REVISIONS	CHK.	APP.
⚠				
⚠				
⚠				
⚠				

CUSTOMER		DRAWING	DESIGN	CHECKED	APPROVED	SCALE	DATE	ORDER NO.
DRAWING TITLE	GROUND WIRE SYSTEM					NONE		
	CABLE 사양	극동호이스트 주식회사 KUK DONG HOIST CO., LTD.				DWG. NO	KDC2M-E234	

산업재해예방 안전보건공단 KOREA OCCUPATIONAL SAFETY & HEALTH AGENCY
192.168.11.76 / 2014-04-19 09:50:43
불법복제 및 배포금지

1	2	3	4	5	6	7	8	9	10	11	12	13	14	15	16	17	18	19	20
																			ADR'S NO.
																			A4

* MAIN POWER : AC 3PH 220V,380V,440V,440V,480V 60Hz (LIFT 24,30M)

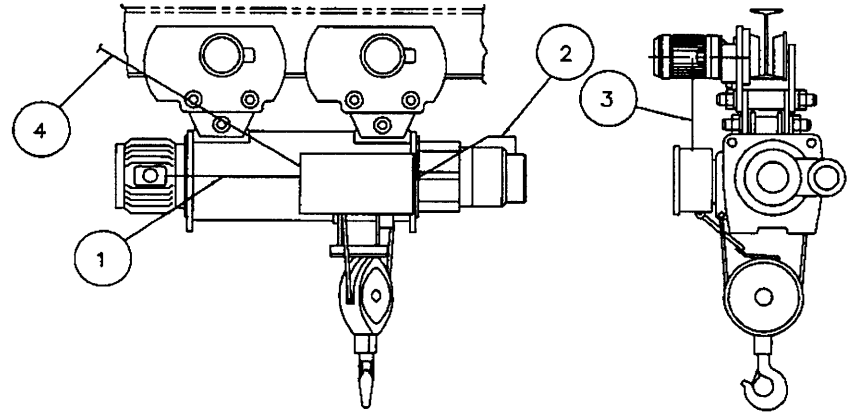

본 도면은 EARTH를 명기하기 위한 도면으로서
실제 배치와 다를 수 있으며 HOIST 본체와의
EARTH용 CABLE은 REFERENCE임

*3종 접지공사 100Ω 이하 (AC 3PH 400V 미만)
*특 종 접지공사 10Ω 이하 (AC 3PH 400V 이상)

NO	CABLE TYPE	CABLE SIZE 220V	CABLE SIZE 380V	CABLE TYPE	CABLE SIZE 440V,460V,480V	REMARK
1	VCT	4.0sq	4.0sq	VCT	4.0sq	HOISTING MOTOR WITH EARTH
2	VCT	4.0sq	4.0sq	VCT	4.0sq	CREEP MOTOR WITH EARTH
3	VCT	4.0sq	4.0sq	VCT	4.0sq	T/S MOTOR WITH EARTH
4	VFCT	6.0sq	4.0sq	VFCT	4.0sq	MAIN POWER WITH EARTH

등전위접지

1.전기장비와 기계의 노출된 모든 도전부는 보호본딩회로에 연결되어야 하며 적절한 접지연속성 기능이 유지되야함.

2. 보호본딩회로에는 개폐기, 과전류보호장치가 부착되지 않아야 한다.

시험대상 전선의 최소 유효단면적	최고전압강하(V)
1.0	3.3
1.5	2.6
2.5	1.6
4.0	1.4
>6.0	1.0

MK	DATE	REVISIONS	CHK.	APP.
4				
3				
2				
1				

CUSTOMER		DRAWING	DESIGN	CHECKED	APPROVED	SCALE	DATE	ORDER NO.
DRAWING TITLE	GROUND WIRE SYSTEM					NONE		
	CABLE 사양	극동호이스트 주식회사 KUK DONG HOIST CO., LTD.				DWG. NO	KDC2M-E234	

산업재해예방
안전보건공단
KOREA OCCUPATIONAL SAFETY & HEALTH AGENCY
192.168.11.76 / 2014-04-19 09:50:43
불법복제 및 배포금지

1	2	3	4	5	6	7	8	9	10	11	12	13	14	15	16	17	18	19	20
																			ADR'S NO.
																			A4

* MAIN POWER : AC 3PH 220V,380V,440V,440V,480V 60Hz (LIFT 6, 9, 12, 18, 24, 30M)

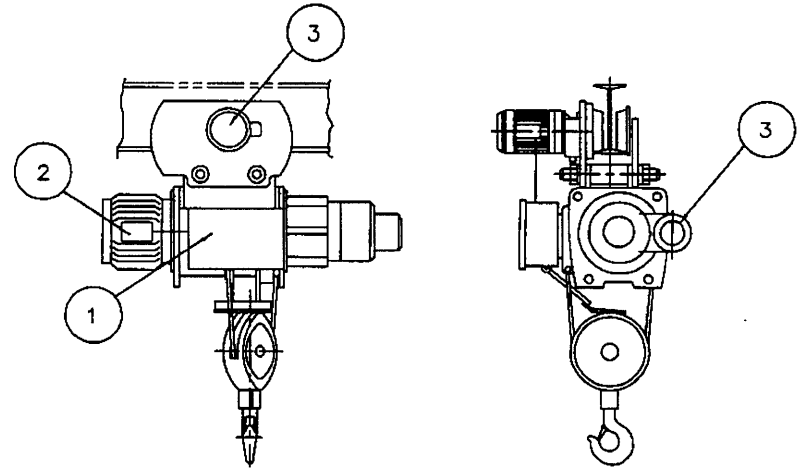

한국산업안전보건공단
KOREA OCCUPATIONAL SAFETY & HEALTH AGENCY

1

KD	ELECTRIC WIRE ROPE HOIST		
MODEL		RATING	min
CAPACITY	Kg	LIFT	m
HOIST SPEED	m/min	POWER SOURCE	V Hz
HOIST MOTOR	Kw P	AMP.S R&T HOIST	A
TRAV.SPEED	m/min	AMP.S R&T TRAV.	A
TRAV.MOTOR	Kw P	WIRE ROPE	ø
WIDTH OF RAIL	mm	WEIGET	Kg
DATE		SERIAL	
KUKDONG HOIST CO.,LTD			

2

KD	3 PHASE INDUCTION MOTOR		
KW	P	TYPE	TENV
VOLTS	V	RATING	min
AMP.S	A	AMP.TEMP	40℃
HEARTS		INS.CLASS	F
R.P.M		BEARING	
ROTOR	C	BEARING	
SERIAL.		DATE	
KUKDONG HOIST CO.,LTD			

3

KD	3 PHASE INDUCTION MOTOR		
KW	P	TYPE	TENV
VOLTS	V	RATING	min
AMP.S	A	AMP.TEMP	40℃
HEARTS		INS.CLASS	F
R.P.M		BEARING	
ROTOR	C	BEARING	
SERIAL.		DATE	
KUKDONG HOIST CO.,LTD			

192.168.11.76 / 2014-04-19 09:50:43

MK	DATE	REVISIONS	CHK.	APP.
△1				
△2				
△3				
△4				

CUSTOMER		DRAWING	DESIGN	CHECKED	APPROVED	SCALE	DATE	ORDER NO.
DRAWING TITLE	WIRE HOIST NAME PLATE / CABLE 사양					NONE		
		KD 극동호이스트 주식회사 KUK DONG HOIST CO., LTD.				DWG. NO	KDC2M-E234	

1	2	3	4	5	6	7	8	9	10	11	12	13	14	15	16	17	18	19	20

POWER CIRCUIT

TRAVELLING POWER SUPPLY SYSTEM

ADR'S NO. A1

KD02E001

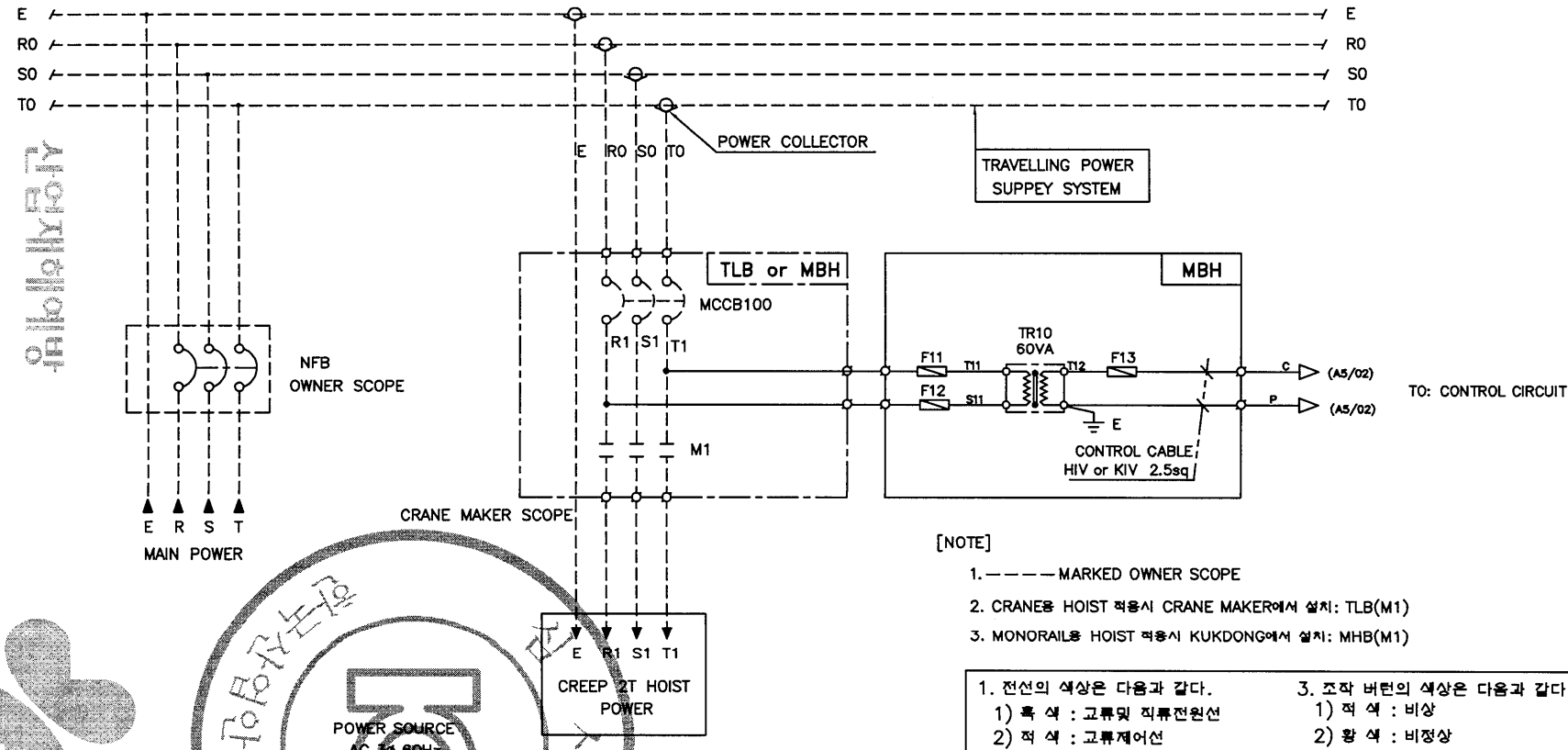

SELECTION	VOLTAGE	F11 F12	F13	MCCB100	TR10
	220V	2A	3A	33AF/30AT	220/110,120V 60VA
	380V	1A	3A	33AF/15AT	380/110,120V 60VA
	440V	1A	3A	33AF/15AT	440/110,120V 60VA
	460V	1A	3A	33AF/15AT	460/110,120V 60VA
	480V	1A	3A	33AF/15AT	480/110,120V 60VA

[NOTE]

1. ———— MARKED OWNER SCOPE
2. CRANE용 HOIST 적용시 CRANE MAKER에서 설치: TLB(M1)
3. MONORAIL용 HOIST 적용시 KUKDONG에서 설치: MHB(M1)

1. 전선의 색상은 다음과 같다.
   1) 흑 색 : 고류및 직류전원선
   2) 적 색 : 고류제어선
   3) 청 색 : 직류제어선
   4) 녹색 또는 녹색과 황색 혼용 : 접지
2. 표시등의 색상은 다음과 같다.
   1) 적 색 : 비상
   2) 황 색 : 비정상
   3) 녹 색 : 정상
   4) 청색 : 의무
   5) 흰색 : 중립
3. 조작 버튼의 색상은 다음과 같다.
   1) 적 색 : 비상
   2) 황 색 : 비정상
   3) 청 색 : 의무
   4) 흰색, 회색 또는 흑색 : 지정된 의미없음

MK	DATE	REVISIONS	CHK.	APP.
4				
3				
2				
1				

CUSTOMER	
DRAWING TITLE	MAIN POWER CIRCUIT 1 DIAGRAM

DRAWING	DESIGN	CHECKED	APPROVED	SCALE	DATE	ORDER NO.
				NONE		

극동호이스트 주식회사
KUK DONG HOIST CO., LTD.

DWG. NO KDC02E001

산업재해예방
한국산업안전보건공단
KOREA OCCUPATIONAL SAFETY & HEALTH AGENCY
192.168.11.76 / 2014-04-19 09:50:43
무단복제 및 배포금지

불법복제 및 배포금지

ADR'S NO.

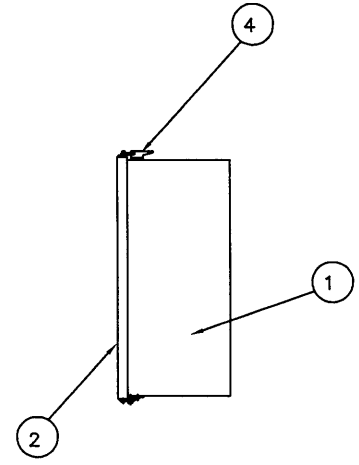

NO	DESCRIPTION	MT'L	REMARKS
1	PANEL CASE	SPC	2.3t
2	PANEL COVER	SPC	2.3t
3	HINGE	PUR'	
4	CLAMP	PUR'	
5	SPONGE	PUR'	

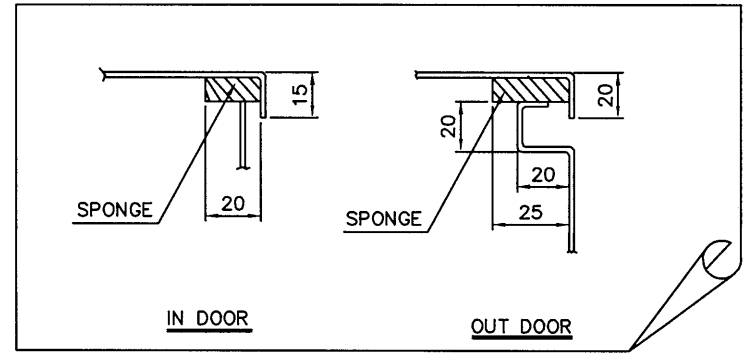

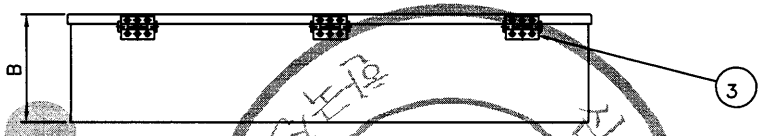

N O T E

1.PROTECTION DEGREE ;

A, INDOOR TYPE : DUST PROOF

B, OUT DOOR TYPE : SPLASH PROOF

2.FINAL PAINTING COLOR (MUNSELL NO.)

A. IN SIDE : 10B 3/5

B. OUT SIDE : 10B 3/5

3.PAINTING THICKNESS : ABOVE 40 um

4.APPLICATION VOLTAGE : 220V,380V,440V,460V,480V

5.제어용 전선 : 2.5sq KIV,HIV

6. 외함 개방 구조는 다음과 같다.

1) 외함 개방시 충전부분이 차단되도록 한다.

2) 외함 개방 후 충전되어있는 부분은 IP2X 이상의 직접 접촉 방호가 되어있을것.

SELECTION	HOIST CAPACITY	DESCRIPTION	IN DOOR			OUT DOOR			REMARK
			A	B	L	A	B	L	
	C 1.5 TON	CREEP	360	170	790	360	170	790	
		T/S	240	150	350	240	150	350	

MK	DATE	REVISIONS	CHK.	APP.
4				
3				
2				
1				

CUSTOMER	
DRAWING TITLE	CREEP HOISTING CONTROL BOX LAY-OUT

DRAWING	DESIGN	CHECKED	APPROVED	SCALE	DATE	ORDER NO.
				NONE		

극동호이스트 주식회사
KUK DONG HOIST CO., LTD.

DWG. NO KDC2EB0

KFC2EB0

한국산업안전보건공단
KOREA OCCUPATIONAL SAFETY & HEALTH AGENCY
192.168.11.76 / 2014-04-19 09:50:43

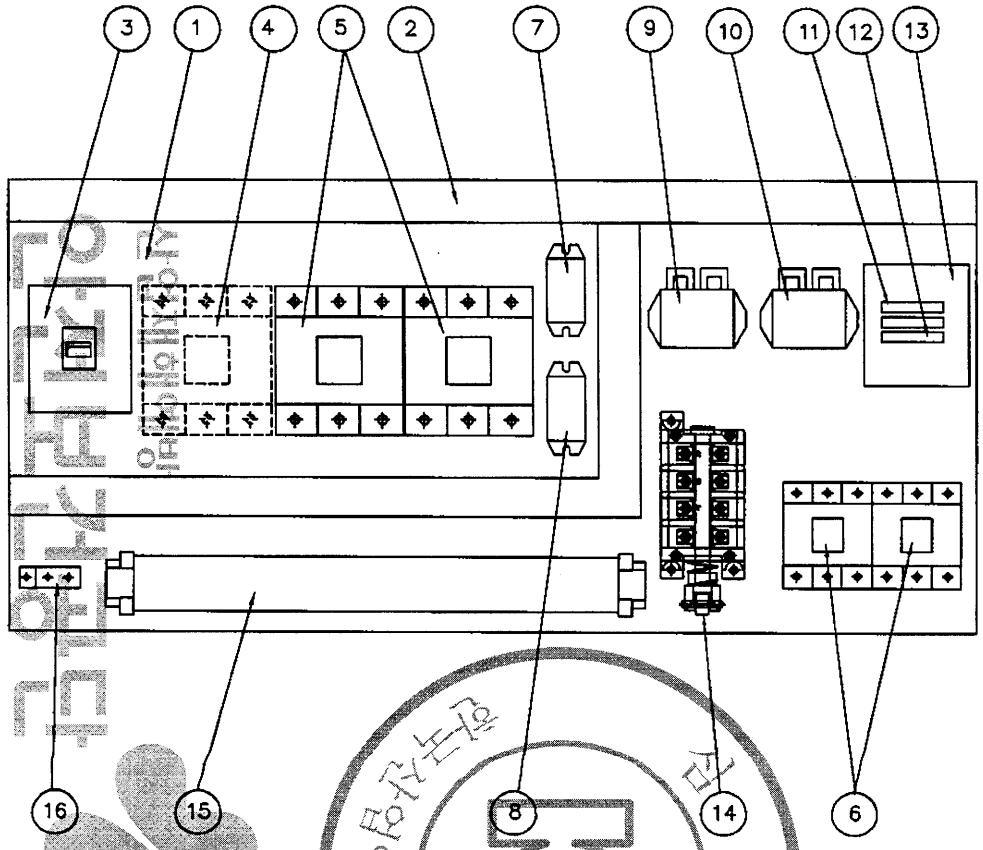

NO	DESCRIPTION	SPECIFICATION	Q'TY	REMARK
1	CHASSIS PLATE		1	아 연 도 금
2	CABLE DUCT	–	1	
3	N.F.B	33AF/30AT	1	HOISTING
4	MAGNET CONTACTOR	DMC32C	1	MAIN MAG.
5	MAGNET CONTACTOR	DMC40C	2	HOISTING
6	MAGNET CONTACTOR	DMC22C	2	CREEP HOIST
7	SILICON RECTIFIER	SR–30	1	HOISTING
8	SILICON RECTIFIER	SR–30	1	CREEP HOIST
9	E.O.C.R	SS–30	1	HOISTING
10	E.O.C.R	SS–05	1	CREEP HOIST
11	FUSE	2 A	2	
12	FUSE	3 A	1	
13	TRANSFORMER	220V/110V(120V), 100VA	1	
14	UPPER LIMITER	AC 600V, 75A	1	LS–1,2
15	TERMINAL BLOCK .	60A,15A		
16	EARTH TERMINAL	3tx20x50	1	

NOTE

1. UPPER LIMIT LS–1,LS–2의 접점 허용 전류 용량 : AC 600V, 75A
2. POWER SOURCE : AC. 3Φ 220V 60HZ
3. EARTH TERMINAL RESISTANCE : 0.018Ω

NOTE

1. 전선의 색상은 다음과 같다.
   1) 흑색 : 고류 및 직류 전원선로
   2) 적색 : 고류제어선
   3) 주황색 : 외부 전원에서 공급되는 연동장치 제어회로
   4) 녹색 또는 녹색과 황색 혼용 : 접지선
   5) 청색 : 직류 제어선로
2. CABLE MATERIAL : KIV OR EQUIVALENT / MIN SIZE : 2.5sq
3. 제어용 전선 : 2.5mm KIV,HIV
4. 제작시 다소 변경 될수있음.
5. 외함 개방구조는 다음과 같을것.
   1) 외함 개방시 충전부분이 차단되도록 할것.
   2) 외함 개방후 충전되어있는 부분은 IP2X 이상의 직접 접촉 방호가 되어있을것.

MK	DATE	REVISIONS	CHK.	APP.

CUSTOMER		DRAWING	DESIGN	CHECKED	APPROVED	SCALE	DATE	ORDER NO.
DRAWING TITLE	CREEP HOIST CONTROL BOX					NONE		
	ARRANGEMENT DRAWING	극동호이스트 주식회사 KUK DONG HOIST CO., LTD.				DWG. NO	KDC2BA21	

192.168.11.76 / 2014-04-19 09:50:43
KOREA OCCUPATIONAL SAFETY & HEALTH AGENCY
한국산업안전보건공단
본 자료는 무단 배포 및 복제 금지

1	2	3	4	5	6	7	8	9	10	11	12	13	14	15	16	17	18	19	20.

ADR'S NO.

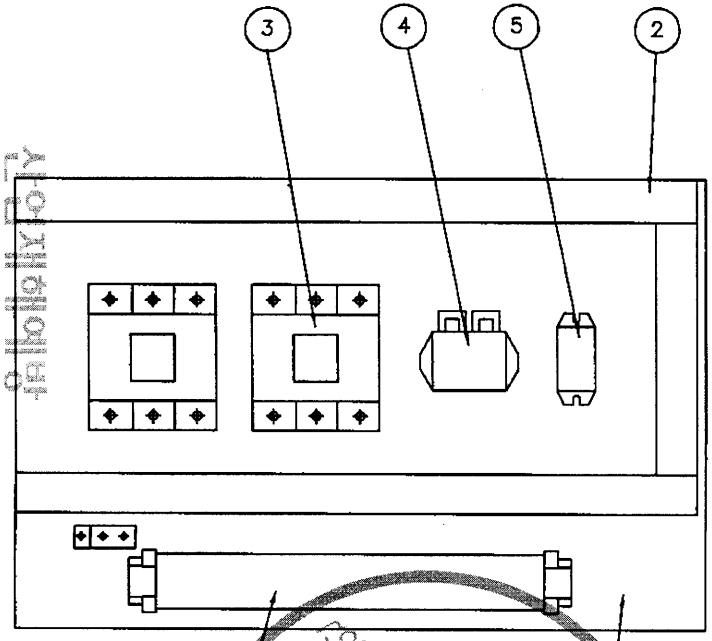

NO	DESCRIPTION	SPEC	Q'TY	REMARK
1	CHASSIS PLATE	–	1	아 연 도 금
2	CABLE DUCT	–	1	
3	MAGNET CONTACTOR	DMC22C	2	TRAVERSING
4	E.O.C.R	SS–05	1	TRAVERSING
5	SILICON RECTIFIER	SR–30	1	TRAVERSING
6	TERMINAL BLOCK	25A , 15A	1	TRAVERSING

NOTE 1. 전선의 색상은 다음과 같다.
1) 흑색 : 고류 및 직류 전원선로
2) 적색 : 고류제어선
3) 주황색 : 외부 전원에서 공급되는 연동장치 제어회로
4) 녹색 또는 녹색과 황색 혼용 : 접지선
5) 청색 : 직류 제어선로

2. CABLE MATERIAL : KIV OR EQUIVALENT
MIN SIZE : 2.5sq
3. 제어용 전선 : 2.5mm KIV,HIV
4. 제작시 다소 변경 될수있음.
5. 외함 개방구조는 다음과 같을것.
1) 외함 개방시 충전부분이 차단되도록 할것.
2) 외함 개방후 충전되어있는 부분은 IP2X 이상의 직접 접촉 방호가 되어있을것.

MK	DATE	REVISIONS	CHK.	APP.

CUSTOMER		DRAWING	DESIGN	CHECKED	APPROVED	SCALE	DATE	ORDER NO.
DRAWING TITLE	TRAVERSING POWER CONTROL BOX					NONE		
	ARRANGEMENT DRAWING	극동호이스트 주식회사 KUK DONG HOIST CO., LTD.				DWG. NO	KDC2bt22	

산업재해예방
안전보건공단
KOREA OCCUPATIONAL SAFETY & HEALTH AGENCY
192.168.11.76 / 2014-04-19 09:50:43
본 도면은 본 배포금지

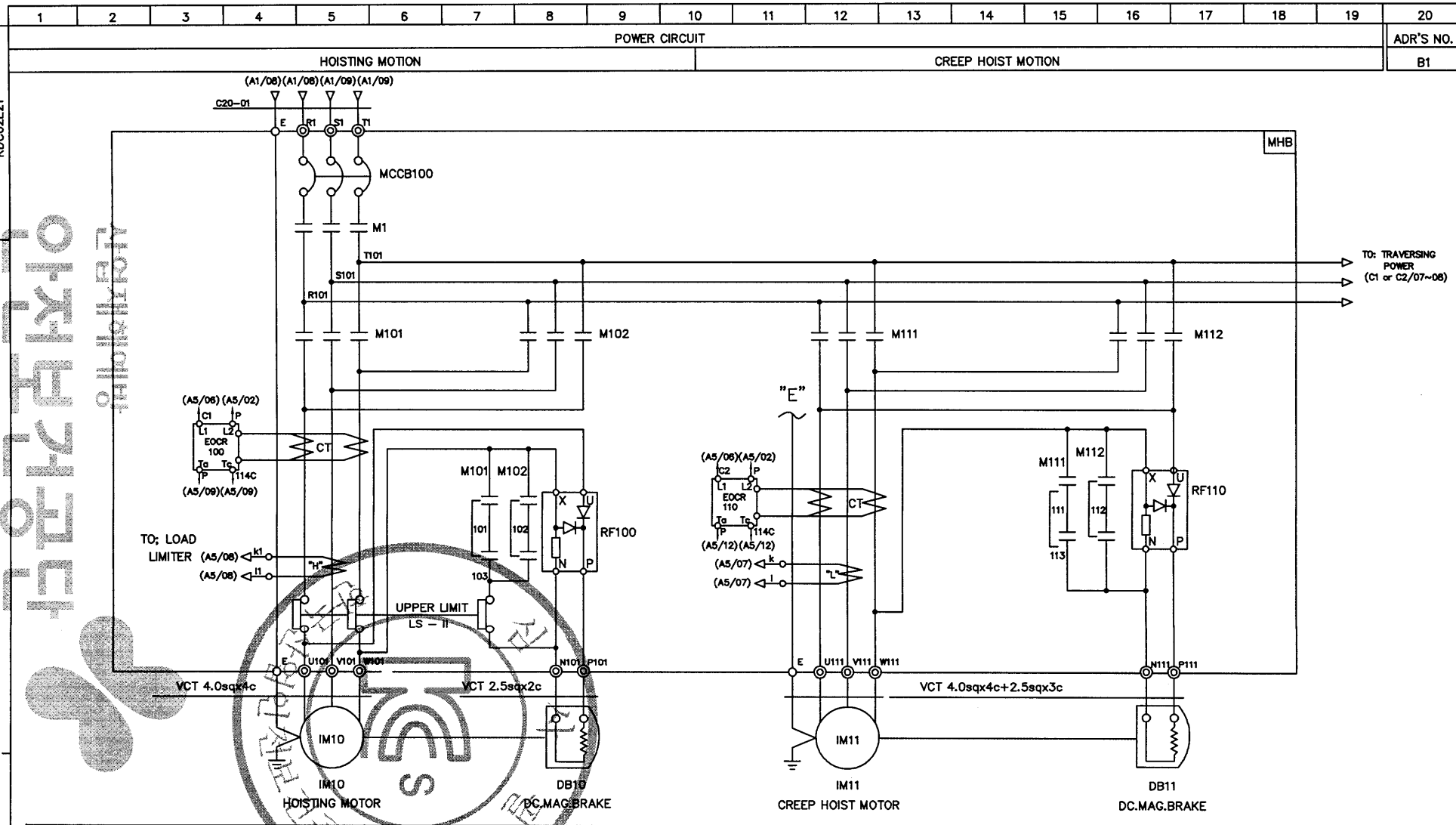

SPECIFICATION / SYMBOLS	HOISTING POWER	HOISTING MOTOR	CREEP MOTOR	DC.MAG' BRAKE	NO FUSE BREAKER	TRANSFORMER	FUSE		MAIN MAGNET	MAGNET CONTACTOR		UPPER LIMIT	ELECTRIC OVER CURRENT RELAY		SILICON RECTIFIER		LOAD LIMITER	CABLE
DESCRIPTION	HOIST	IM 10	IM 11	DB10, 11	MCCB100	TR 1	F11,F12	F13	M1	M101,M102	M111,M112	LS-I, LS-II	EOCR100	EOCR110	RF100	RF110	LOAD LIMITER	C20-01
	1.5TON AC3PH 220V 60Hz	3.7KWx4P	0.4KWx4P	DC 100V	ABE-33AF/30A	220/110V,120V/100VA	2A	3A	DMC32C	DMC40C	DMC22C	AC 600V 75A	SS-30	SS-05	SR-30	SR-30	JDL-100	VFCT 6.0sqx4c
SELECTION / MAKER	KUK DONG				LS	SHINHAN	-		DONG-A			KUK DONG	ASECO				JUNGHO	DONGIL

MK	DATE	REVISIONS	CHK.	APP.
4				
3				
2				
1				

CUSTOMER		DRAWING	DESIGN	CHECKED	APPROVED	SCALE	DATE	ORDER NO.
DRAWING TITLE	CREEP HOISTING POWER & CONTROL CIRCUIT DIAGRAM(FOR MONORAIL HOIST)					NONE		
		국동호이스트 주식회사 KUK DONG HOIST CO., LTD.				DWG. NO	KDC2E21	

192.168.11.76 / 2014-04-19 09:50:43
KOREA OCCUPATIONAL SAFETY & HEALTH AGENCY
한국산업안전보건공단
불법복제 및 배포금지

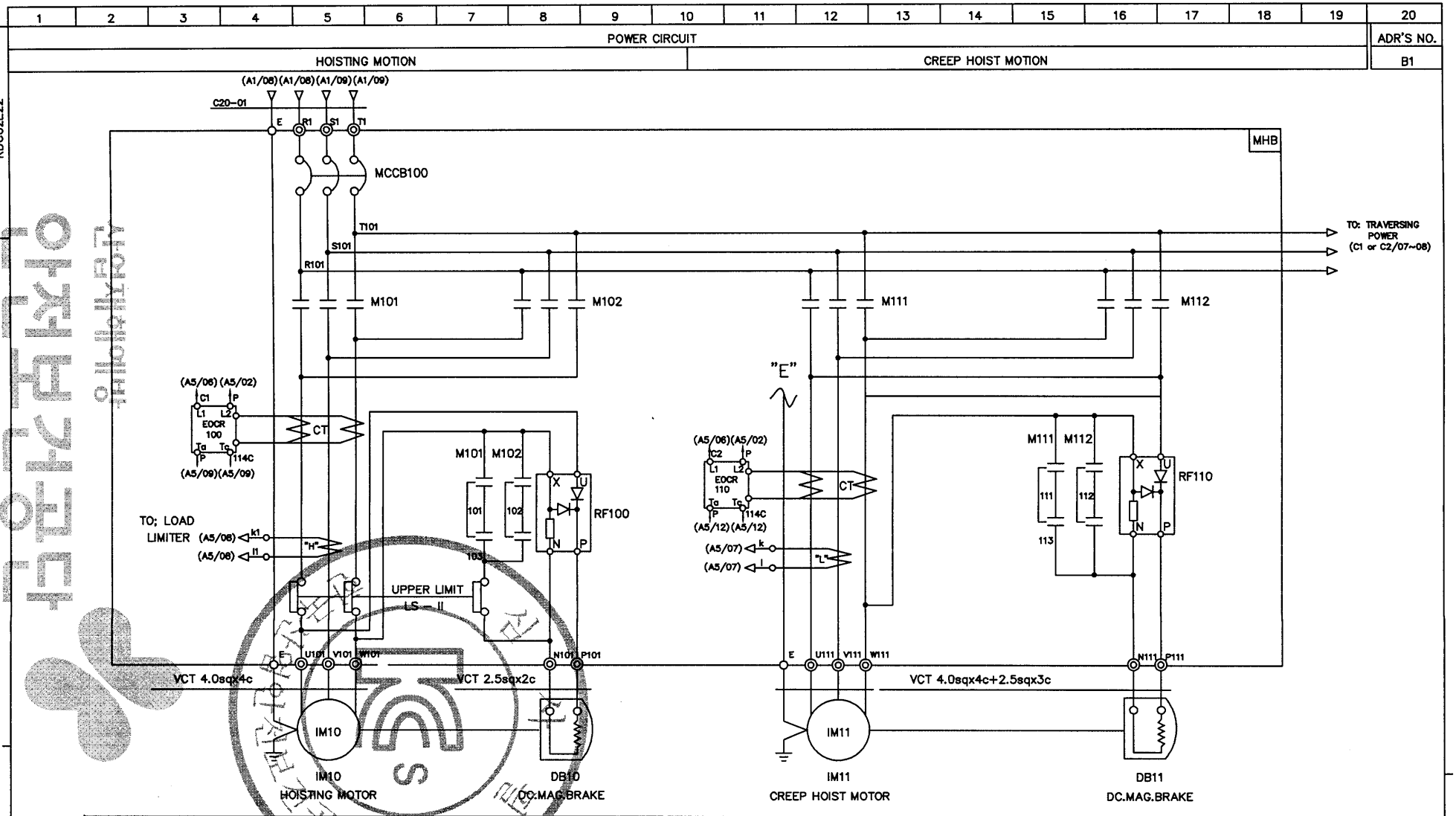

SPECIFICATION / SYMBOLS	HOISTING POWER	HOISTING MOTOR	CREEP MOTOR	DC.MAG BRAKE	NO FUSE BREAKER	TRANSFORMER	FUSE		MAGNET CONTACTOR		UPPER LIMIT	ELECTRIC OVER CURRENT RELAY		SILICON RECTIFIER		LOAD LIMITER	CABLE
DESCRIPTION	HOIST	IM 10	IM 11	DB10, 11	MCCB100	TR 1	F11,F12	F13	M101,M102	M111,M112	LS-I, LS-II	EOCR100	EOCR110	RF100	RF110	LOAD LIMITER	C20-01
	1.5TON AC3PH 220V 60Hz	3.7KWx4P	0.4KWx4P	DC 100V	ABE-33AF/30A	220/110V,120V/100VA	2A	3A	DMC40C	DMC22C	AC 600V 75A	SS-30	SS-05	SR-30	SR-30	JDL-100	VFCT 6.0sqx4c
SELECTION / MAKER	KUKDONG				LS	SHINHAN	–		DONG-A		KUK DONG	ASECO				JUNGHO	DONGIL

MK	DATE	REVISIONS	CHK.	APP.
4				
3				
2				
1				

CUSTOMER		DRAWING	DESIGN	CHECKED	APPROVED	SCALE	DATE	ORDER NO.
DRAWING TITLE	CREEP HOISTING POWER & CONTROL					NONE		
	CIRCUIT DIAGRAM(FOR CRANE)	국동호이스트 주식회사 KUK DONG HOIST CO., LTD.				DWG. NO	KDC2E22	

KOREA OCCUPATIONAL SAFETY & HEALTH AGENCY
192.168.11.76 / 2014-04-19 09:50:43
무단배포 및 복제 금지

1	2	3	4	5	6	7	8	9	10	11	12	13	14	15	16	17	18	19	20

POWER CIRCUIT — ADR'S NO.

TRAVERSING MOTION — C1

KDC02E23

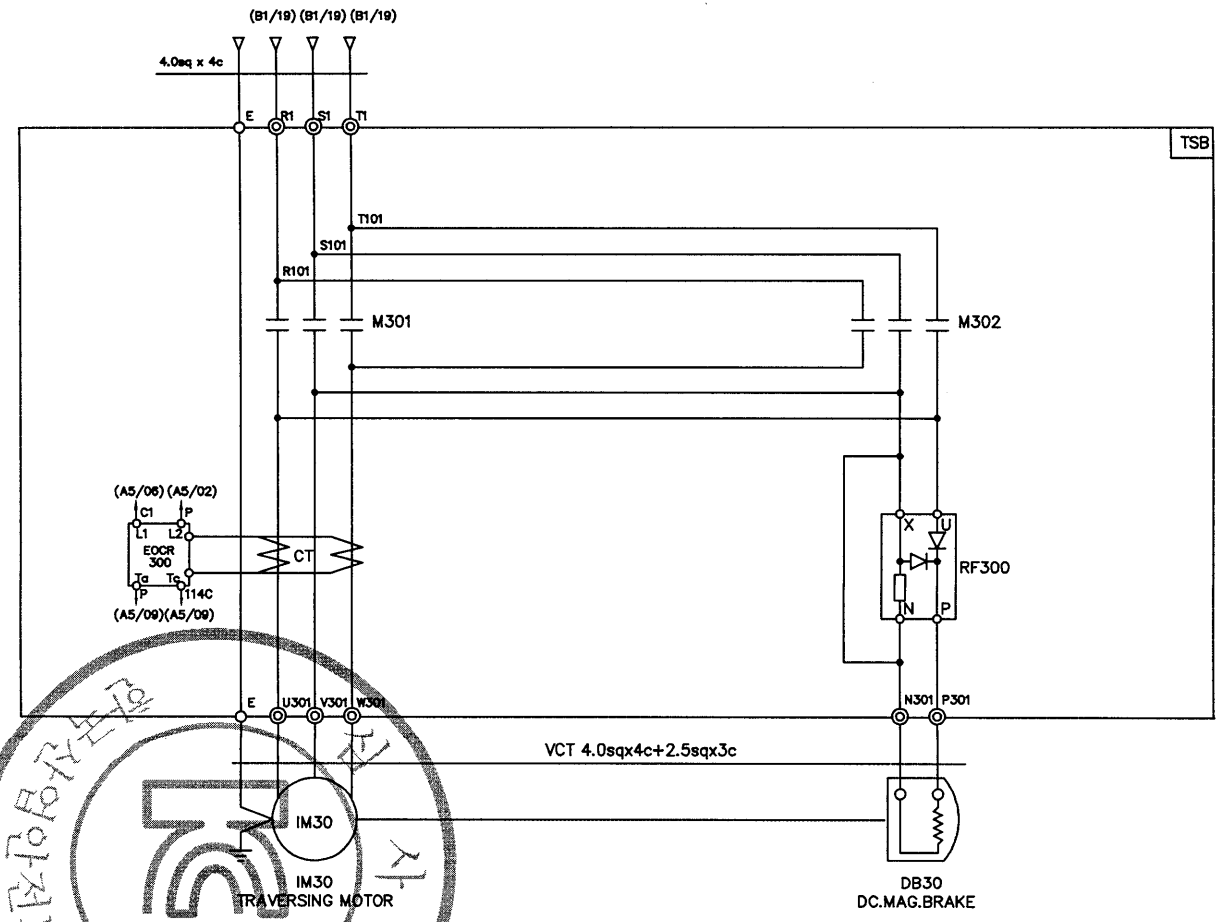

SPECIFICATION / SYMBOLS	TRAVERSING MOTOR	DC MAG' BRAKE	MAGNET CONTACTOR	SILICON RECTIFIER	ELECTRIC OVER CURRENT RELAY	LIMIT SWTCH
DESCRIPTION	IM 30	DB 30	M301 , M302	RF 300	EOCR 300	LS-301 , LS-302
	0.75KW x 4P AC 3PH 220V 60Hz	DC 100V	DMC22C	SR-30 AC 220V/DC 100V	SS-05	HY - W904
	0.5KW x 6P AC 3PH 220V 60Hz	DC 100V	DMC22C	SR-30 AC 220V/DC 100V	SS-05	HY - W904
SELECTION / MAKER	KUKDONG		DONG-A	ASECO		

MK	DATE	REVISIONS	CHK.	APP.
4				
3				
2				
1				

CUSTOMER		DRAWING	DESIGN	CHECKED	APPROVED	SCALE	DATE	ORDER NO.
DRAWING TITLE	TRAVERSING POWER CONTROL CIRCUIT DIAGRAM					NONE		
		극동호이스트 주식회사 KUK DONG HOIST CO., LTD.				DWG. NO	KDC02E23	

산업재해예방
한국산업안전보건공단
KOREA OCCUPATIONAL SAFETY & HEALTH AGENCY
192.168.11.76 / 2014-04-19 09:50:43
무단배포 및 복제 금지

1	2	3	4	5	6	7	8	9	10	11	12	13	14	15	16	17	18	19	20

POWER CIRCUIT — ADR'S NO.

TRAVERSING MOTION — C2

KDC02E24

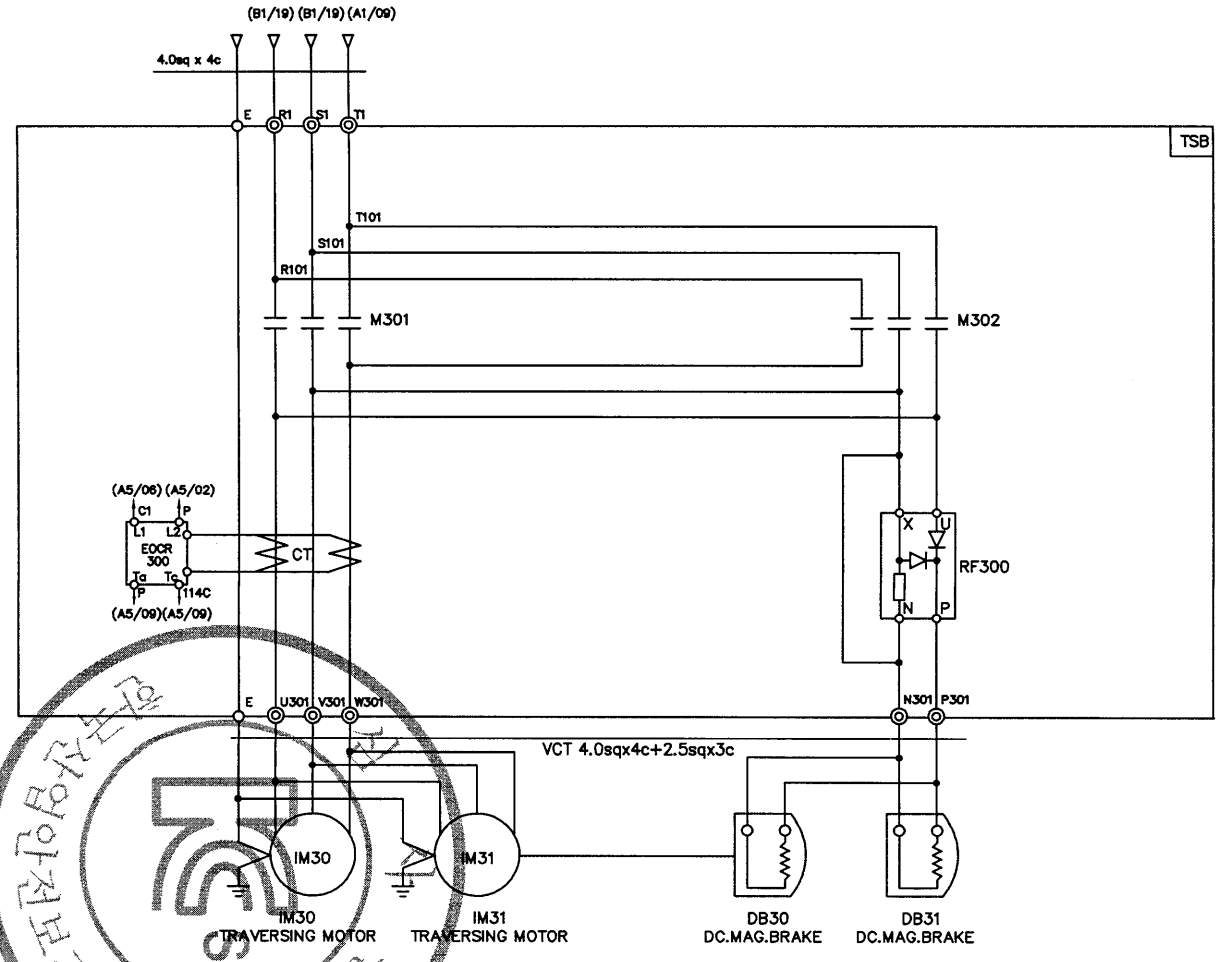

SPECIFICATION / SYMBOLS	TRAVERSING MOTOR	DC MAG' BRAKE	MAGNET CONTACTOR	SILICON RECTIFIER	ELECTRIC OVER CURRENT RELAY	LIMIT SWTCH
DESCRIPTION	IM 30 , 1M31	DB 30	M301 , M302	RF 300	EOCR 300	LS-301 , LS-302
	0.75KW x 4P AC 3PH 220V 60Hz	DC 100V	DMC22C	SR-30 AC 220V/DC 100V	SS-05	HY - W904
	0.5KW x 6P AC 3PH 220V 60Hz	DC 100V	DMC22C	SR-30 AC 220V/DC 100V	SS-05	HY - W904
SELECTION / MAKER	KUK DONG		DONG-A	ASECO		

MK	DATE	REVISIONS	CHK.	APP.
4				
3				
2				
1				

CUSTOMER		DRAWING	DESIGN	CHECKED	APPROVED	SCALE	DATE	ORDER NO.
DRAWING TITLE	TRAVERSING POWER CONTROL CIRCUIT DIAGRAM					NONE		
		극동호이스트 주식회사 KUK DONG HOIST CO., LTD.				DWG. NO	KDC02E24	

한국안전보건공단
KOREA OCCUPATIONAL SAFETY & HEALTH AGENCY
192.168.11.76 / 2014-04-19 09:50:43
무단복제 및 배포금지

1	2	3	4	5	6	7	8	9	10	11	12	13	14	15	16	17	18	19	20

POWER CIRCUIT — ADR'S NO.

TRAVERSING MOTION — C1

KDC02E025

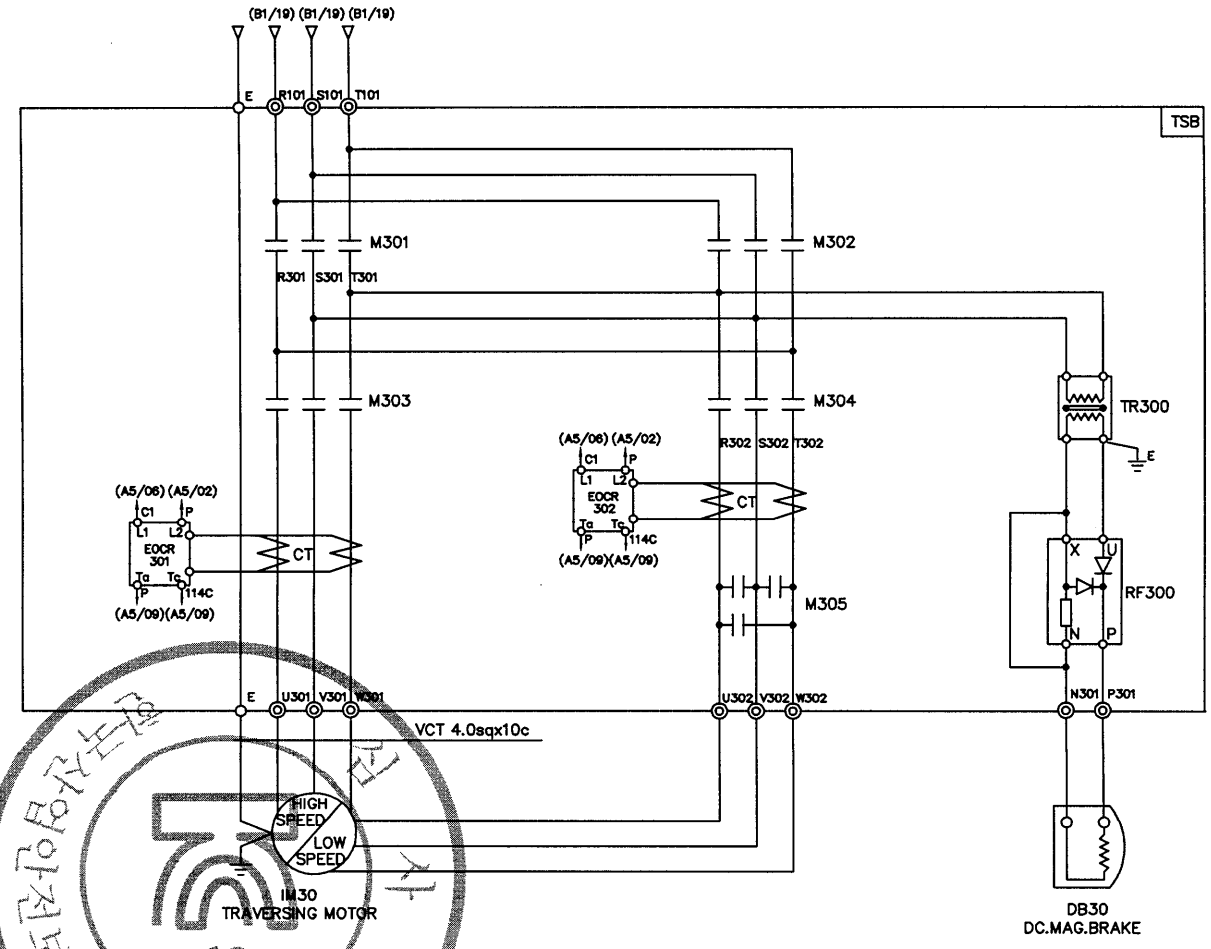

SPECIFICATION / SYMBOLS / DESCRIPTION		TRAVERSING MOTOR	DC MAG' BRAKE	MAGNET CONTACTOR		SILICON RECTIFIER	ELECTRIC OVER CURRENT RELAY	TRANSFORMER
		IM30	DB30	M301 , M302 , M303	M304 , M305	RF 300	EOCR 301,302	TR300
	220V	0.5/0.25KWx6/12P AC 3PH 220V 60Hz	DC 100V	DMC22C	DMC22C	SR-30	SS-05	AC220/220V, 300VA
	220V	0.8/0.4KWx4/8P AC 3PH 220V 60Hz	DC 100V	DMC22C	DMC22C	SR-30	SS-05	AC220/220V, 300VA
SELECTION / MAKER		KUKDONG		DONG-A		ASECO		SHINHAN

MK	DATE	REVISIONS	CHK.	APP.
4				
3				
2				
1				

CUSTOMER		DRAWING	DESIGN	CHECKED	APPROVED	SCALE	DATE	ORDER NO.
DRAWING TITLE	TRAVERSING POWER CONTROL CIRCUIT DIAGRAM					NONE		
		국동호이스트 주식회사 KUK DONG HOIST CO., LTD.				DWG. NO	KDC02E25	

한국산업안전보건공단
KOREA OCCUPATIONAL SAFETY & HEALTH AGENCY
192.168.11.76 / 2014-04-19 09:50:43
불법복제 및 배포금지

1	2	3	4	5	6	7	8	9	10	11	12	13	14	15	16	17	18	19	20

POWER CIRCUIT

TRAVERSING MOTION

ADR'S NO. C2

KDC02E026

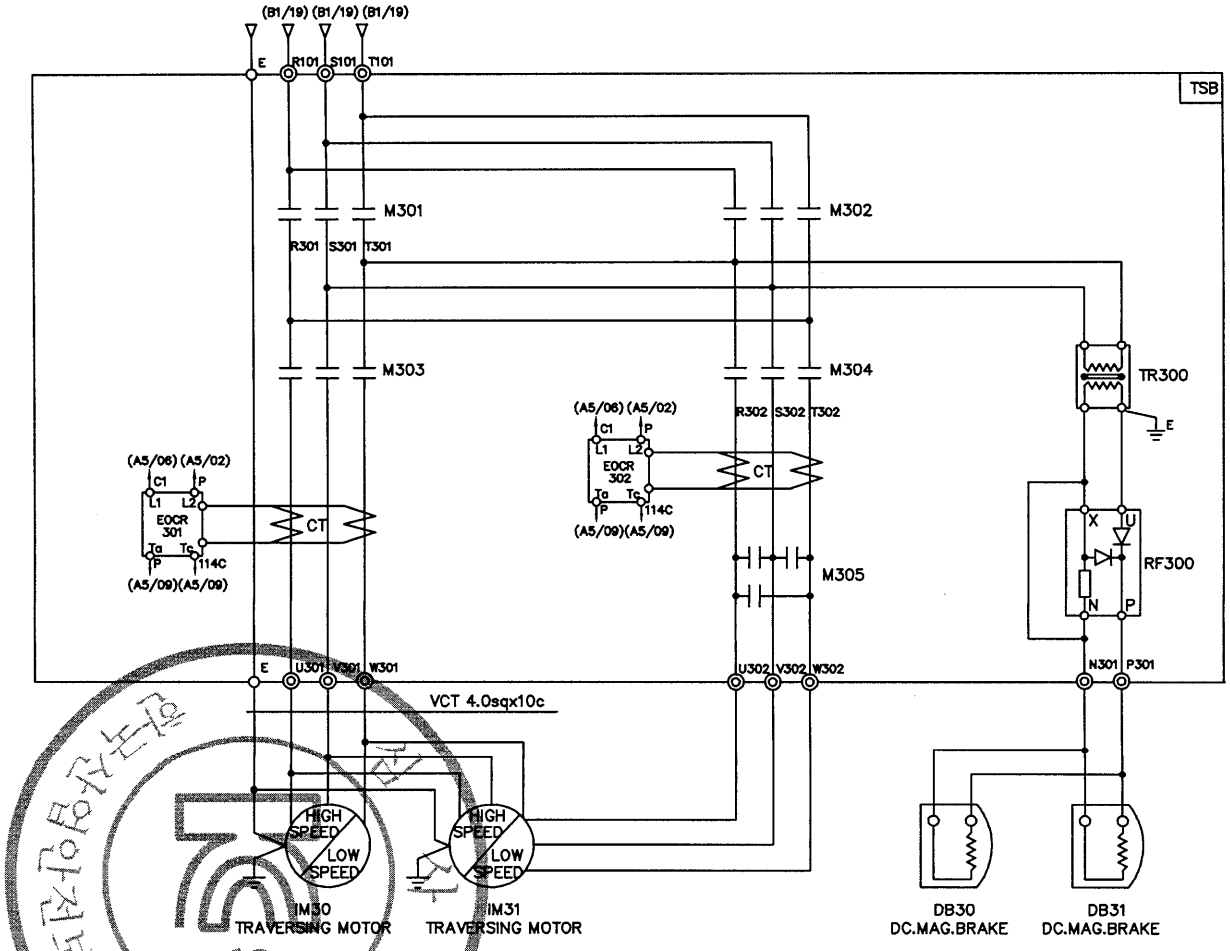

SPECIFICATION / SYMBOLS / DESCRIPTION		TRAVERSING MOTOR	DC MAG' BRAKE	MAGNET CONTACTOR		SILICON RECTIFIER	ELECTRIC OVER CURRENT RELAY	TRANSFORMER
		IM 30 , 1M31	DB30 , DB31	M301 , M302 , M303	M304 , M305	RF 300	EOCR 301,302	TR300
	220V	0.5/0.25KWx6/12P AC 3PH 220V 60Hz	DC 100V	DMC22C	DMC22C	SR-30	SS-05	AC220/220V, 300VA
	220V	0.8/0.4KWx4/8P AC 3PH 220V 60Hz	DC 100V	DMC22C	DMC22C	SR-30	SS-05	AC220/220V, 300VA
SELECTION / MAKER		KUKDONG		DONG-A		ASECO		SHINHAN

MK	DATE	REVISIONS	CHK.	APP.
4				
3				
2				
1				

CUSTOMER		DRAWING	DESIGN	CHECKED	APPROVED	SCALE	DATE	ORDER NO.
DRAWING TITLE	TRAVERSING POWER CONTROL CIRCUIT					NONE		
	DIAGRAM	극동호이스트 주식회사 KUK DONG HOIST CO., LTD.				DWG. NO	KDC02E26	

아주대학교 산업안전보건대학원
KOREA OCCUPATIONAL SAFETY & HEALTH AGENCY
192.168.11.76 / 2014-04-19 09:50:43
불법복제 및 배포금지

1	2	3	4	5	6	7	8	9	10	11	12	13	14	15	16	17	18	19	20.

ADR'S NO.

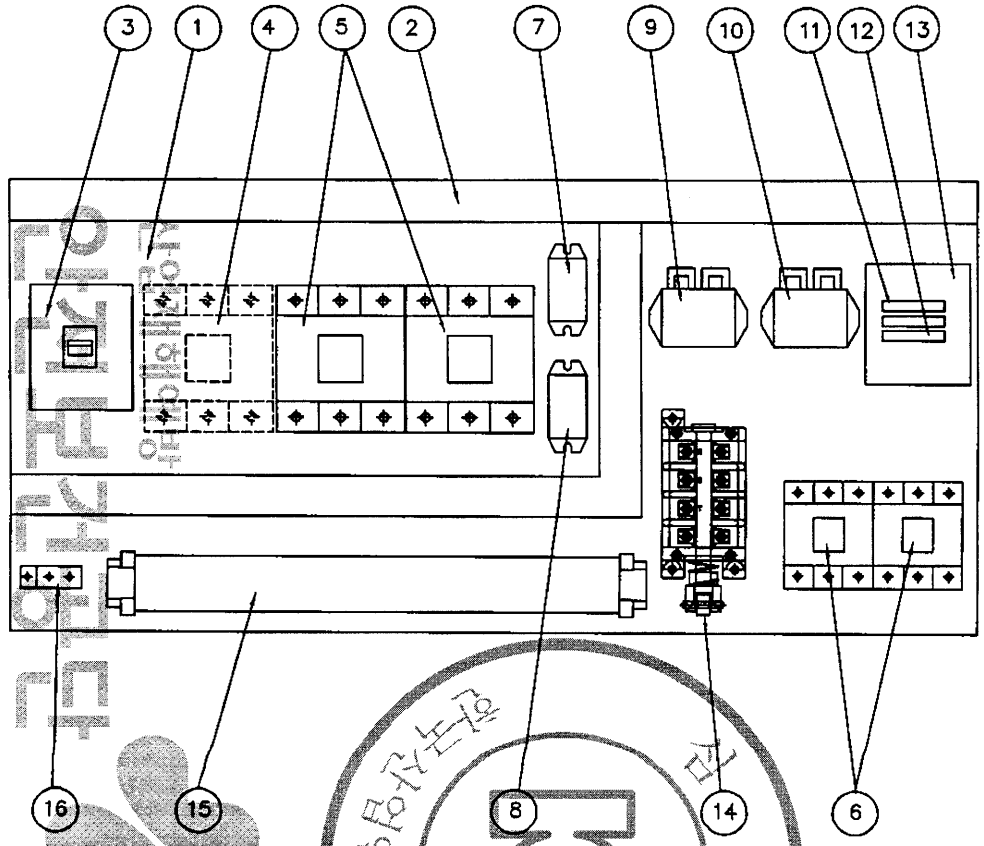

NO	DESCRIPTION	SPECIFICATION	Q'TY	REMARK
1	CHASSIS PLATE		1	아 연 도 금
2	CABLE DUCT	–	1	
3	N.F.B	33AF/15AT	1	HOISTING
4	MAGNET CONTACTOR	DMC22C	1	MAIN MAG.
5	MAGNET CONTACTOR	DMC22C	2	HOISTING
6	MAGNET CONTACTOR	DMC22C	2	CREEP HOIST
7	SILICON RECTIFIER	SR-30	1	HOISTING
8	SILICON RECTIFIER	SR-30	1	CREEP HOIST
9	E.O.C.R	SS-30	1	HOISTING
10	E.O.C.R	SS-05	1	CREEP HOIST
11	FUSE	1 A	2	
12	FUSE	3 A	1	
13	TRANSFORMER	220V/110V(120V), 60VA	1	
14	UPPER LIMITER	AC 600V, 75A	1	LS-1,2
15	TERMINAL BLOCK	60A,15A		
16	EARTH TERMINAL	3tx20x50	1	

NOTE

1. UPPER LIMIT LS-1,LS-2의 접점 허용 전류 용량 : AC 600V, 75A
2. POWER SOURCE : AC. 3φ 380V 60HZ
3. EARTH TERMINAL RESISTANCE : 0.018Ω

NOTE

1. 전선의 색상은 다음과 같다.
   1) 흑색 : 교류 및 직류 전원선로
   2) 적색 : 교류제어선
   3) 주황색 : 외부 전원에서 공급되는 연동장치 제어회로
   4) 녹색 또는 녹색과 황색 혼용 : 접지선
   5) 청색 : 직류 제어선로
2. CABLE MATERIAL : KIV OR EQUIVALENT / MIN SIZE : 2.5sq
3. 제어용 전선 : 2.5mm KIV,HIV
4. 제작시 다소 변경 될수있음.
5. 외함 개방구조는 다음과 같을것.
   1) 외함 개방시 충전부분이 차단되도록 할것.
   2) 외함 개방후 충전되어있는 부분은 IP2X 이상의 직접 접촉 방호가 되어있을것.

MK	DATE	REVISIONS	CHK.	APP.

CUSTOMER		DRAWING	DESIGN	CHECKED	APPROVED	SCALE	DATE	ORDER NO.
DRAWING TITLE	CREEP HOIST CONTROL BOX					NONE		
	ARRANGEMENT DRAWING	극동호이스트 주식회사 KUK DONG HOIST CO., LTD.				DWG. NO	KDC2BA31	

192.168.11.76 / 2014-04-19 09:50:43
KOREA OCCUPATIONAL SAFETY & HEALTH AGENCY
본 도면은 무단 배포금지

1	2	3	4	5	6	7	8	9	10	11	12	13	14	15	16	17	18	19	20.

ADR'S NO.

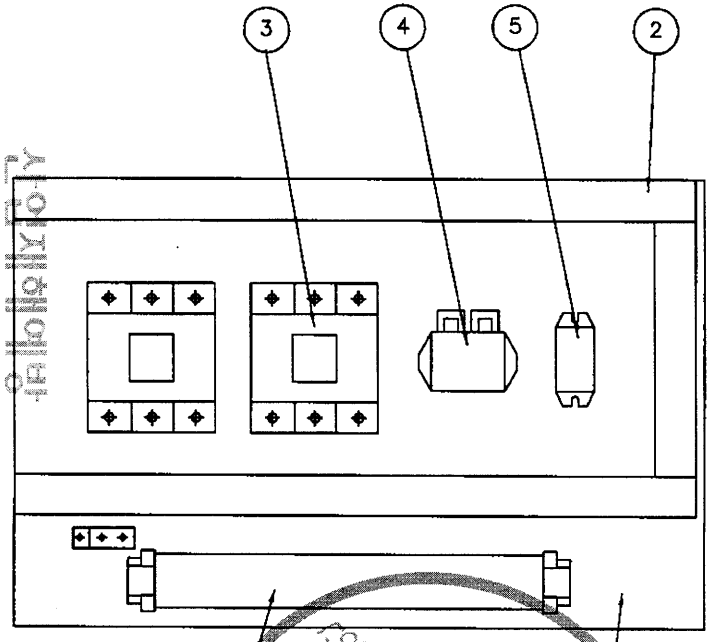

NO	DESCRIPTION	SPEC	Q'TY	REMARK
1	CHASSIS PLATE	–	1	아 연 도 금
2	CABLE DUCT	–	1	
3	MAGNET CONTACTOR	DMC22C	2	TRAVERSING
4	E.O.C.R	SS–05	1	TRAVERSING
5	SILICON RECTIFIER	SR–30	1	TRAVERSING
6	TERMINAL BLOCK	25A , 15A	1	TRAVERSING

NOTE 1. 전선의 색상은 다음과 같다.
1) 흑색 : 교류 및 직류 전원선로
2) 적색 : 교류제어선
3) 주황색 : 외부 전원에서 공급되는 연동장치 제어회로
4) 녹색 또는 녹색과 황색 혼용 : 접지선
5) 청색 : 직류 제어선로

2. CABLE MATERIAL : KIV OR EQUIVALENT
MIN SIZE : 2.5sq
3. 제어용 전선 : 2.5mm KIV,HIV
4. 제작시 다소 변경 될수있음.
5. 외함 개방구조는 다음과 같을것.
1) 외함 개방시 충전부분이 차단되도록 할것.
2) 외함 개방후 충전되어있는 부분은 IP2X 이상의 직접 접촉 방호가 되어있을것.

MK	DATE	REVISIONS	CHK.	APP.

CUSTOMER		DRAWING	DESIGN	CHECKED	APPROVED	SCALE	DATE	ORDER NO.
DRAWING TITLE	TRAVERSING POWER CONTROL BOX					NONE		
	ARRANGEMENT DRAWING	극동호이스트 주식회사 KUK DONG HOIST CO., LTD.				DWG. NO	KDC2bt32	

192.168.11.76 / 2014-04-19 09:50:43
한국산업안전보건공단 KOREA OCCUPATIONAL SAFETY & HEALTH AGENCY
산업안전보건공단 TCS 검사필
무단전재 및 배포금지

본 배포는 무단 복제 금지

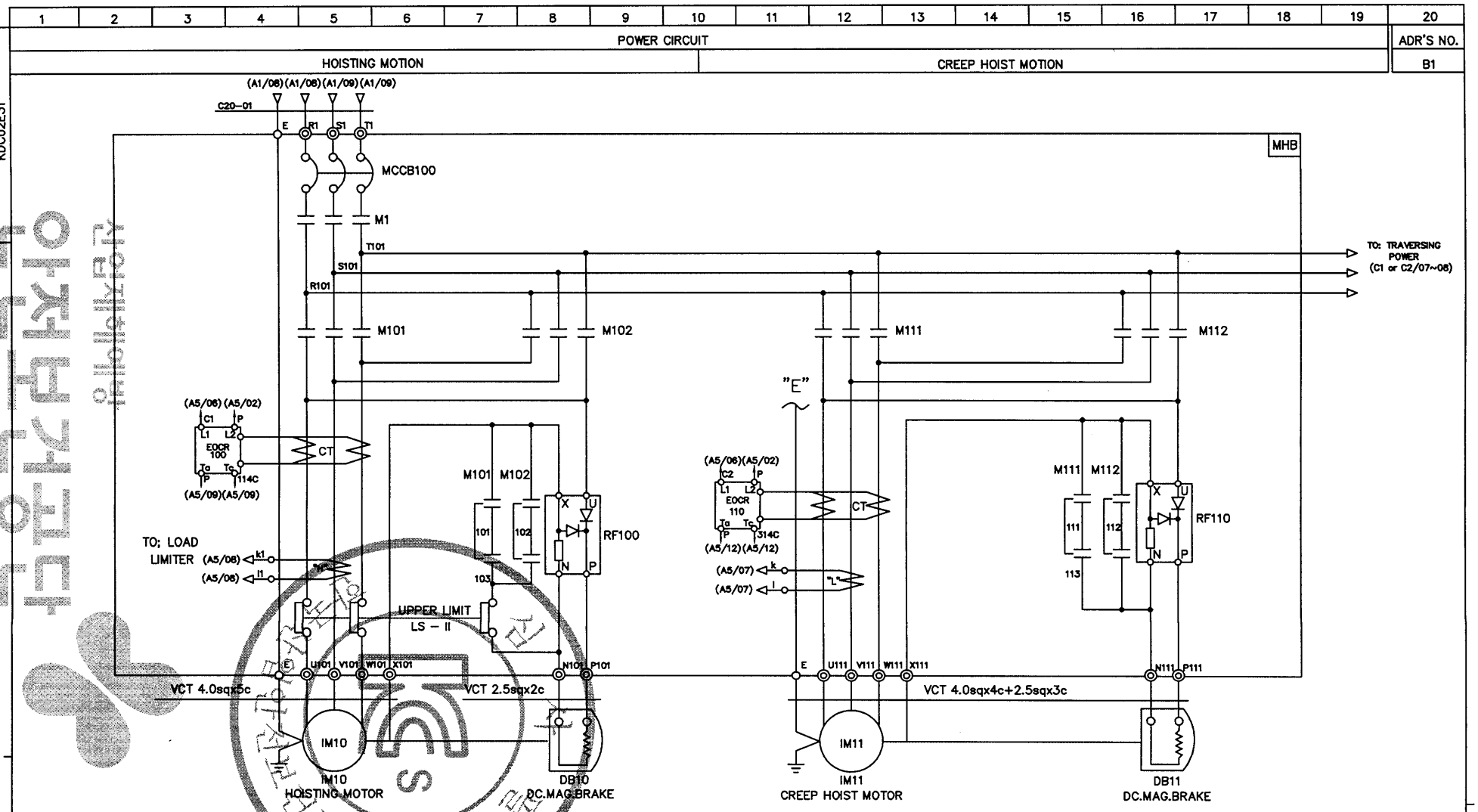

SPECIFICATION / SYMBOLS	HOISTING POWER	HOISTING MOTOR	CREEP MOTOR	DC.MAG BRAKE	NO FUSE BREAKER	TRANSFORMER	FUSE		MAIN MAGNET	MAGNET CONTACTOR		UPPER LIMIT	ELECTRIC OVER CURRENT RELAY		SILICON RECTIFIER		LOAD LIMITER	CABLE
DESCRIPTION	HOIST	IM 10	IM 11	DB10, 11	MCCB100	TR 1	F11,F12	F13	M1	M101,M102	M111,M112	LS-I, LS-II	EOCR100	EOCR110	RF100	RF110	LOAD LIMITER	C20-01
	1.5TON AC 3PH 380V 60Hz	3.7KW x 4P	0.4KWx4P	DC 100V	ABE-33AF/15A	380V/110V,120V, 60VA	1A	3A	DMC22C	DMC22C	DMC22C	AC 600V 75A	SS-30	SS-05	SR-30	SR-30	JDL-100	VFCT 4.0sqx4c
SELECTION / MAKER	KUKDONG				LS	SHINHAN	-		DONG-A			KUKDONG	ASECO				JUNGHO	DONGIL

MK	DATE	REVISIONS	CHK.	APP.
4				
3				
2				
1				

CUSTOMER		DRAWING	DESIGN	CHECKED	APPROVED	SCALE	DATE	ORDER NO.
DRAWING TITLE	CREEP HOISTING POWER CONTROL CIRCUIT DIAGRAM(FOR MONORAIL HOIST)					NONE		
		극동호이스트 주식회사 KUK DONG HOIST CO., LTD.				DWG. NO	KDC02E31	

KOREA OCCUPATIONAL SAFETY & HEALTH AGENCY
192.168.11.76 / 2014-04-19 09:50:43

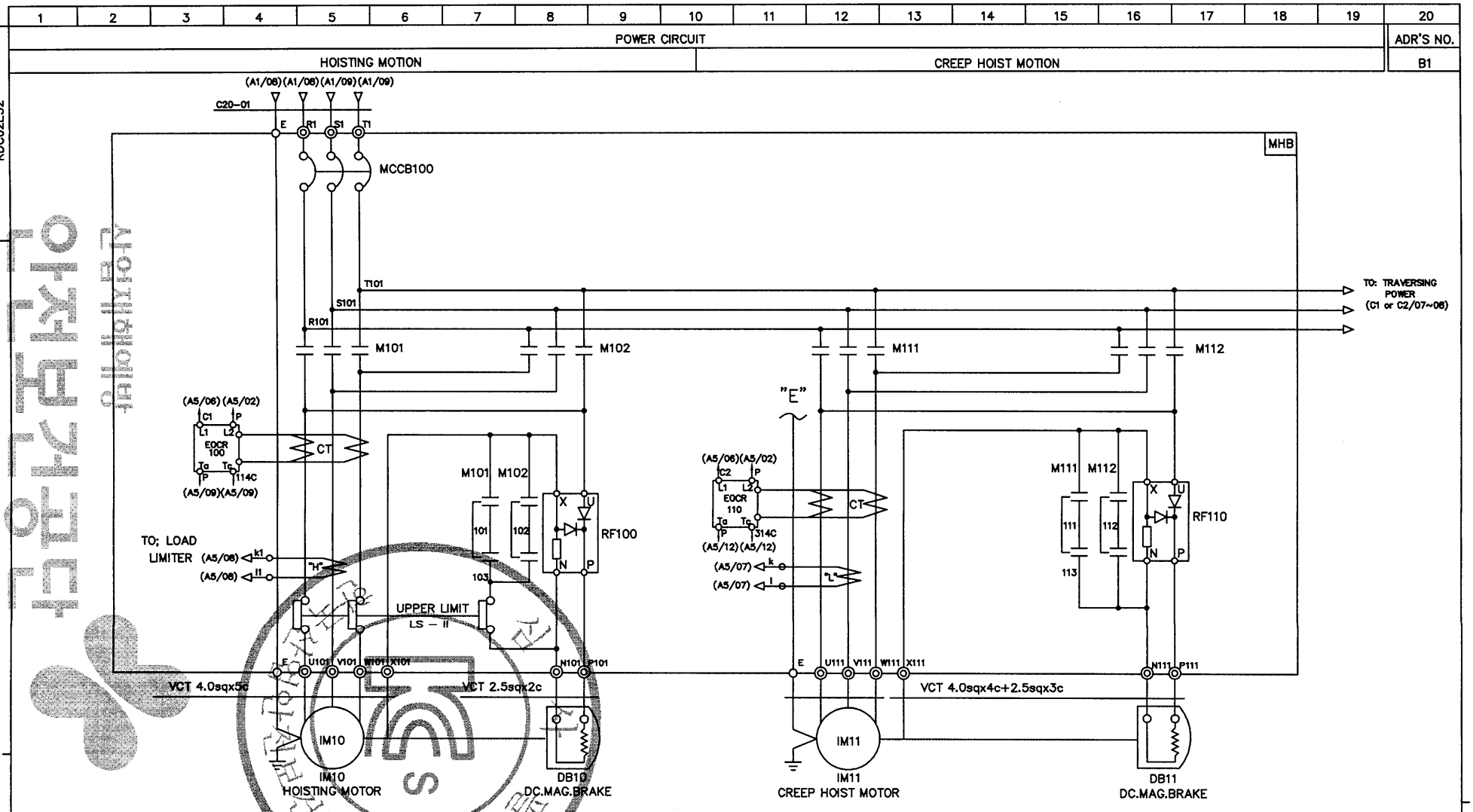

SPECIFICATION / SYMBOLS / DESCRIPTION	HOISTING POWER	HOISTING MOTOR	CREEP MOTOR	DC.MAG. BRAKE	NO FUSE BREAKER	TRANSFORMER	FUSE		MAGNET CONTACTOR		UPPER LIMIT	ELECTRIC OVER CURRENT RELAY		SILICON RECTIFIER		LOAD LIMITER	CABLE
	HOIST	IM 10	IM 11	DB10, 11	MCCB100	TR 1	F11,F12	F13	M101,M102	M111,M112	LS-I, LS-II	EOCR100	EOCR110	RF100	RF110	LOAD LIMITER	C20-01
	1.5TON AC 3PH 380V 60HZ	3.7KW x 4P	0.4KWx4P	DC 100V	ABE-33AF/15A	380V/110V,120V, 60VA	1A	3A	DMC22C	DMC22C	AC 600V 75A	SS-30	SS-05	SR-30	SR-30	JDL-100	VFCT 4.0sqx4c
SELECTION MAKER	KUKDONG				LS	SHINHAN	-		DONG-A		KUKDONG	ASECO				JUNGHO	DONGIL

MK	DATE	REVISIONS	CHK.	APP.
4				
3				
2				
1				

CUSTOMER		DRAWING	DESIGN	CHECKED	APPROVED	SCALE	DATE	ORDER NO.
DRAWING TITLE	CREEP HOISTING POWER CONTROL CIRCUIT DIAGRAM(FOR CRANE)					NONE		
		극동호이스트 주식회사 KUK DONG HOIST CO., LTD.				DWG. NO	KDC02E32	

KOREA OCCUPATIONAL SAFETY & HEALTH AGENCY
192.168.11.76 / 2014-04-19 09:50:43
불법복제 및 배포금지

1	2	3	4	5	6	7	8	9	10	11	12	13	14	15	16	17	18	19	20

POWER CIRCUIT

TRAVERSING MOTION

ADR'S NO. C1

KDC02E33

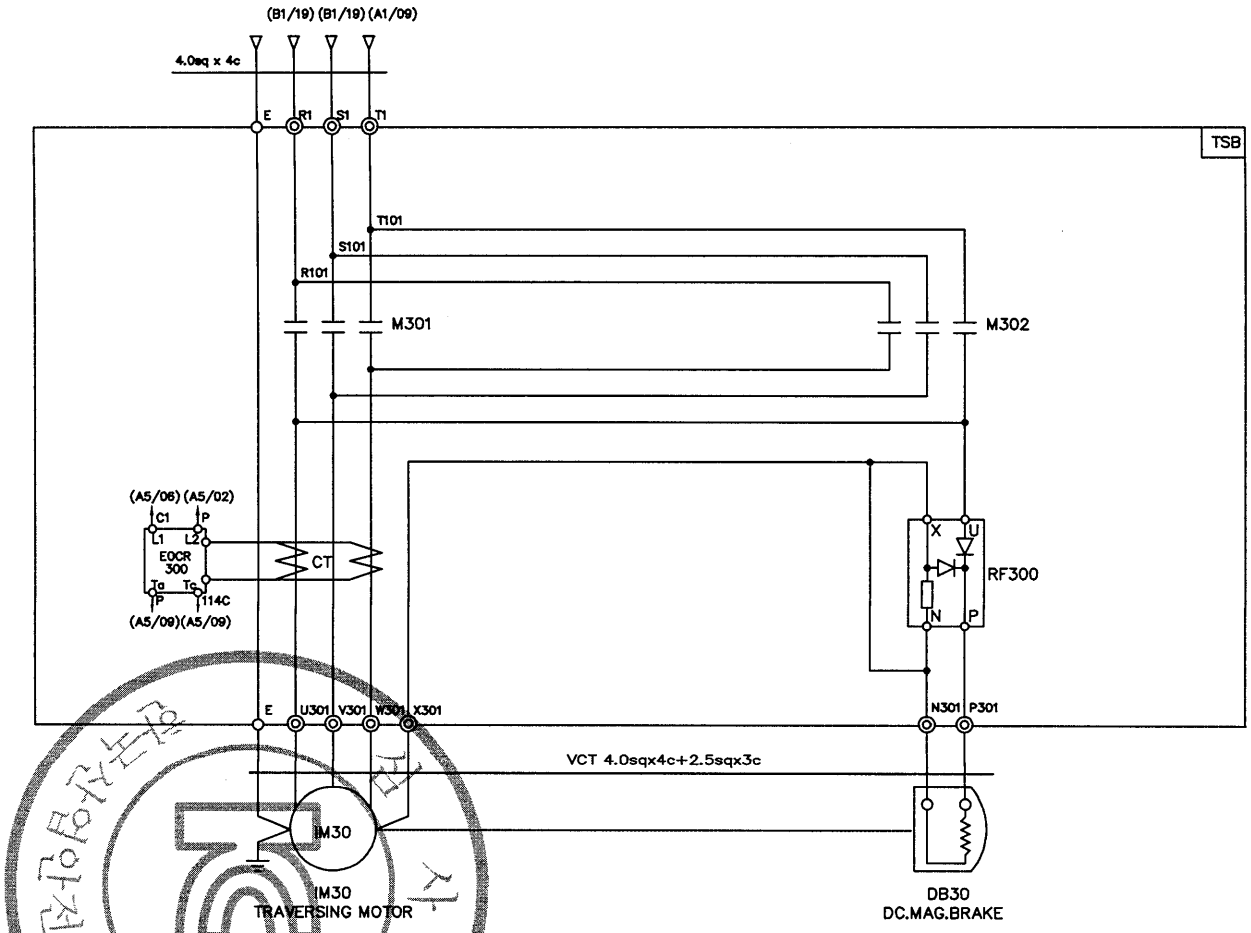

SPECIFICATION / SYMBOLS	TRAVERSING MOTOR	DC MAG' BRAKE	MAGNET CONTACTOR	SILICON RECTIFIER	ELECTRIC OVER CURRENT RELAY	LIMIT SWTCH
DESCRIPTION	IM 30	DB 30	M301 , M302	RF 300	EOCR 300	LS-301 , LS-302
	0.75KW x 4P AC 3PH 380V 60Hz	DC 100V	DMC22C	SR-30 AC 220V/DC 100V	SS-05	HY - W904
	0.5KW x 6P AC 3PH 380V 60Hz	DC 100V	DMC22C	SR-30 AC 220V/DC 100V	SS-05	HY - W904
SELECTION / MAKER	KUKDONG		DONG-A	ASECO		

MK	DATE	REVISIONS	CHK.	APP.
4				
3				
2				
1				

CUSTOMER		DRAWING	DESIGN	CHECKED	APPROVED	SCALE	DATE	ORDER NO.
DRAWING TITLE	TRAVERSING POWER CONTROL CIRCUIT					NONE		
	DIAGRAM	극동호이스트 주식회사 KUK DONG HOIST CO., LTD.				DWG. NO	KDC02E33	

한국산업안전보건공단
KOREA OCCUPATIONAL SAFETY & HEALTH AGENCY
192.168.11.76 / 2014-04-19 09:50:43

불법복제 및 배포금지

1	2	3	4	5	6	7	8	9	10	11	12	13	14	15	16	17	18	19	20

POWER CIRCUIT — ADR'S NO.

TRAVERSING MOTION — C2

KDC02E34

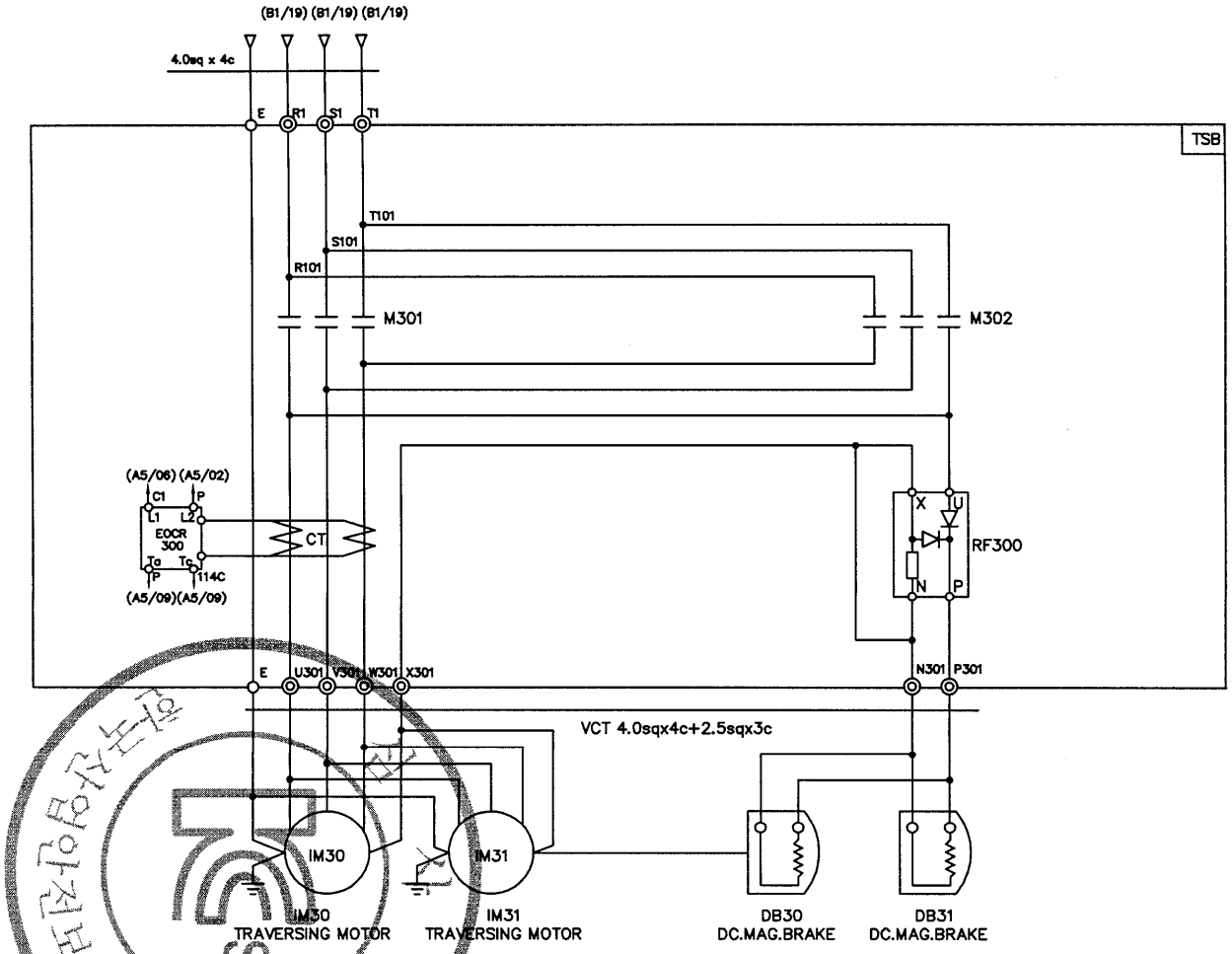

SPECIFICATION / SYMBOLS	TRAVERSING MOTOR	DC MAG' BRAKE	MAGNET CONTACTOR	SILICON RECTIFIER	ELECTRIC OVER CURRENT RELAY	LIMIT SWTCH
DESCRIPTION	IM 30 , 1M31	DB 30	M301 , M302	RF 300	EOCR 300	LS-301 , LS-302
	0.75KW x 4P AC 3PH 380V 60Hz	DC 100V	DMC22C	SR-30 AC 220V/DC 100V	SS-05	HY - W904
	0.5KW x 6P AC 3PH 380V 60Hz	DC 100V	DMC22C	SR-30 AC 220V/DC 100V	SS-05	HY - W904
SELECTION / MAKER	KUKDONG		DONG-A	ASECO		

MK	DATE	REVISIONS	CHK.	APP.
4				
3				
2				
1				

CUSTOMER		DRAWING	DESIGN	CHECKED	APPROVED	SCALE	DATE	ORDER NO.
DRAWING TITLE	TRAVERSING POWER CONTROL CIRCUIT DIAGRAM					NONE		
		극동호이스트 주식회사 KUK DONG HOIST CO., LTD.				DWG. NO	KDC02E34	

산업안전보건공단
KOREA OCCUPATIONAL SAFETY & HEALTH AGENCY
192.168.11.76 / 2014-04-19 09:50:43
불법복제 및 배포금지

1	2	3	4	5	6	7	8	9	10	11	12	13	14	15	16	17	18	19	20

POWER CIRCUIT — ADR'S NO.

TRAVERSING MOTION — C1

KDC02E035

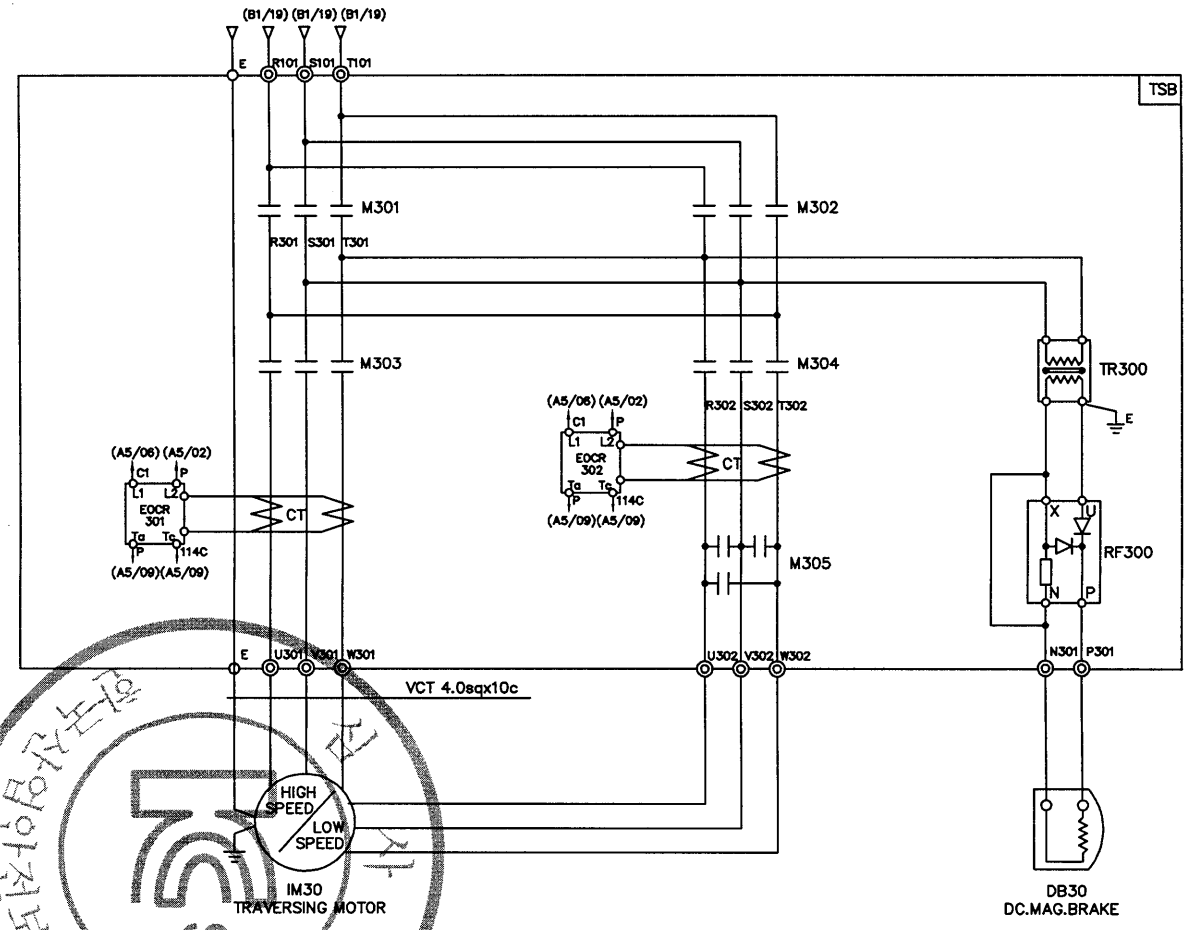

SPECIFICATION / SYMBOLS		TRAVERSING MOTOR	DC MAG' BRAKE	MAGNET CONTACTOR		SILICON RECTIFIER	ELECTRIC OVER CURRENT RELAY	TRANSFORMER
DESCRIPTION		IM 30	DB30	M301 , M302 , M303	M304 , M305	RF 300	EOCR 301,302	TR300
	380V	0.5/025KWx6/12P AC 3PH 380V 60Hz	DC 100V	DMC22C	DMC22C	SR-30	SS-05	AC380/220V, 300VA
	380V	0.8/0.4KWx4/8P AC 3PH 380V 60Hz	DC 100V	DMC22C	DMC22C	SR-30	SS-05	AC380/220V, 300VA
SELECTION / MAKER		KUKDONG		DONG-A		ASECO		SHINHAN

MK	DATE	REVISIONS	CHK.	APP.
4				
3				
2				
1				

CUSTOMER		DRAWING	DESIGN	CHECKED	APPROVED	SCALE	DATE	ORDER NO.
DRAWING TITLE	TRAVERSING POWER CONTROL CIRCUIT					NONE		
	DIAGRAM	국동호이스트 주식회사 KUK DONG HOIST CO., LTD.				DWG. NO	KDC02E35	

한국산업안전보건공단 KOREA OCCUPATIONAL SAFETY & HEALTH AGENCY
192.168.11.76 / 2014-04-19 09:50:43
무단복제 및 배포금지

불법복제 및 배포금지

KDC28E036

POWER CIRCUIT

TRAVERSING MOTION

ADR'S NO. C2

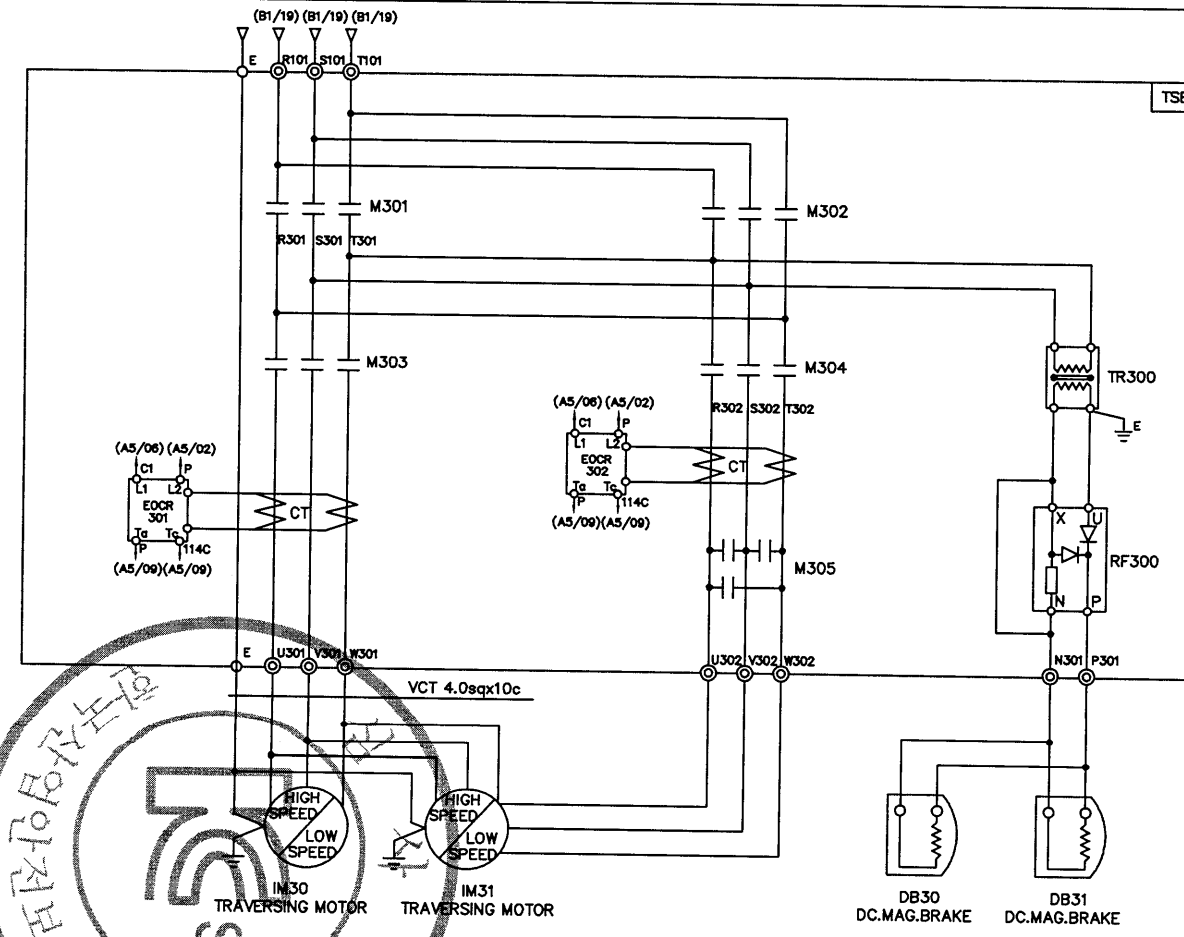

SPECIFICATION / SYMBOLS / DESCRIPTION		TRAVERSING MOTOR	DC MAG' BRAKE	MAGNET CONTACTOR		SILICON RECTIFIER	ELECTRIC OVER CURRENT RELAY	TRANSFORMER
		IM 30 , 1M31	DB30 , DB31	M301 , M302 , M303	M304 , M305	RF 300	EOCR 301,302	TR300
	380V	0.5/0.25KWx6/12P AC 3PH 380V 60Hz	DC 100V	DMC22C	DMC22C	SR-30	SS-05	AC380/220V, 300VA
	380V	0.8/0.4KWx4/8P AC 3PH 380V 60Hz	DC 100V	DMC22C	DMC22C	SR-30	SS-05	AC380/220V, 300VA
SELECTION / MAKER		KUKDONG		DONG-A		ASECO		SHINHAN

MK	DATE	REVISIONS	CHK.	APP.
4				
3				
2				
1				

CUSTOMER		DRAWING	DESIGN	CHECKED	APPROVED	SCALE	DATE	ORDER NO.
DRAWING TITLE	TRAVERSING POWER CONTROL CIRCUIT DIAGRAM					NONE		
		국동호이스트 주식회사 KUK DONG HOIST CO., LTD.				DWG. NO	KDC28E36	

KOREA OCCUPATIONAL SAFETY & HEALTH AGENCY
192.168.11.76 / 2014-04-19 09:50:43

1	2	3	4	5	6	7	8	9	10	11	12	13	14	15	16	17	18	19	20.

ADR'S NO.

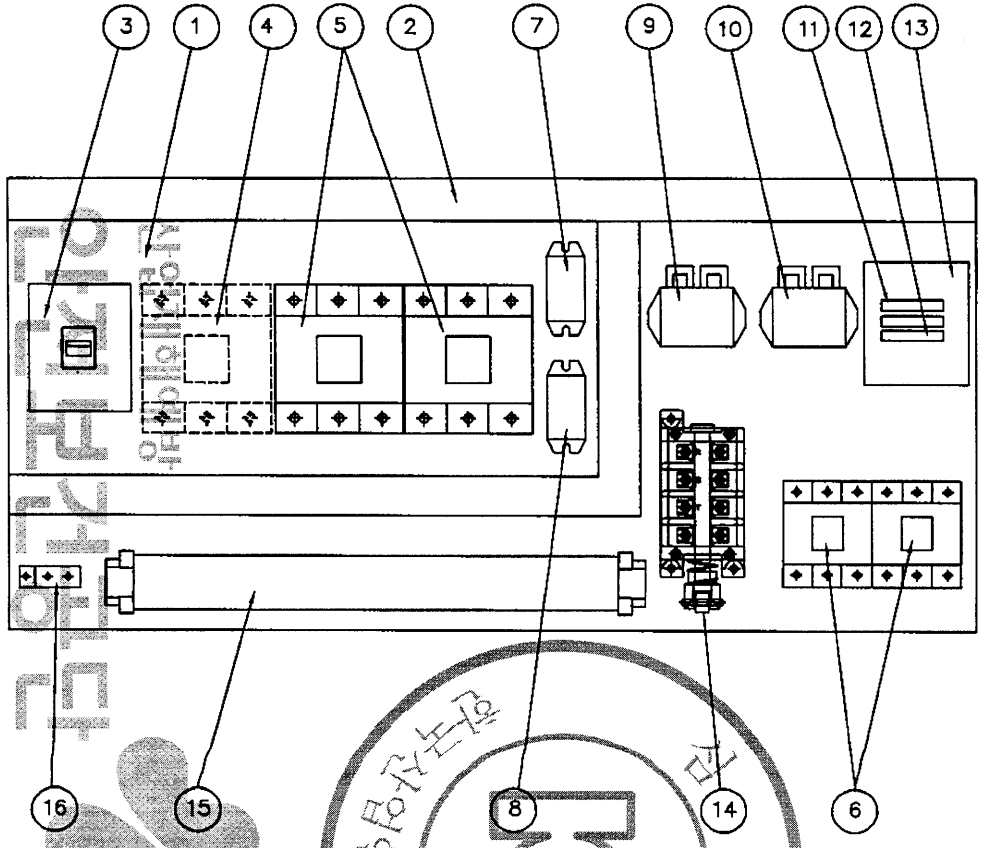

NO	DESCRIPTION	SPECIFICATION	Q'TY	REMARK
1	CHASSIS PLATE		1	아 연 도 금
2	CABLE DUCT	–	1	
3	N.F.B	33AF/15AT	1	HOISTING
4	MAGNET CONTACTOR	DMC22C	1	MAIN MAG.
5	MAGNET CONTACTOR	DMC22C	2	HOISTING
6	MAGNET CONTACTOR	DMC22C	2	CREEP HOIST
7	SILICON RECTIFIER	SR–30	1	HOISTING
8	SILICON RECTIFIER	SR–30	1	CREEP HOIST
9	E.O.C.R	SS–30	1	HOISTING
10	E.O.C.R	SS–05	1	CREEP HOIST
11	FUSE	1 A	2	
12	FUSE	3 A	1	
13	TRANSFORMER	220V/110V(120V), 60VA	1	
14	UPPER LIMITER	AC 600V, 75A	1	LS–1,2
15	TERMINAL BLOCK	60A,15A		
16	EARTH TERMINAL	3tx20x50	1	

NOTE

1. UPPER LIMIT LS–1,LS–2의 접점 허용전류 용량 : AC 600V, 75A
2. POWER SOURCE : AC. 3φ 440V 60HZ
3. EARTH TERMINAL RESISTANCE : 0.018Ω

NOTE

1. 전선의 색상은 다음과 같다.
   1) 흑색 : 고류 및 직류 전원선로
   2) 적색 : 고류제어선
   3) 주황색 : 외부 전원에서 공급되는 연동장치 제어회로
   4) 녹색 또는 녹색과 황색 혼용 : 접지선
   5) 청색 : 직류 제어선로
2. CABLE MATERIAL : KIV OR EQUIVALENT / MIN SIZE : 2.5sq
3. 제어용 전선 : 2.5mm KIV,HIV
4. 제작시 다소 변경 될수있음.
5. 외함 개방구조는 다음과 같을것.
   1) 외함 개방시 충전부분이 차단되도록 할것.
   2) 외함 개방후 충전되어있는 부분은 IP2X 이상의 직접 접촉 방호가 되어있을것.

MK	DATE	REVISIONS	CHK.	APP.
4				
3				
2				
1				

CUSTOMER		DRAWING	DESIGN	CHECKED	APPROVED	SCALE	DATE	ORDER NO.
DRAWING TITLE	CREEP HOIST CONTROL BOX					NONE		
	ARRANGEMENT DRAWING	극동호이스트 주식회사 KUK DONG HOIST CO., LTD.				DWG. NO	KDC2BA41	

192.168.11.76 / 2014-04-19 09:50:43
KOREA OCCUPATIONAL SAFETY & HEALTH AGENCY
무단복제 및 배포금지

1	2	3	4	5	6	7	8	9	10	11	12	13	14	15	16	17	18	19	20.

ADR'S NO.

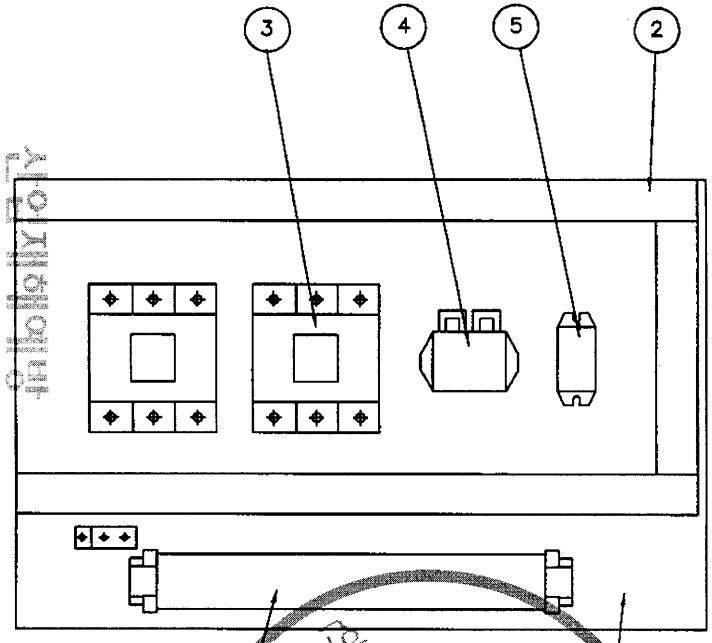

NO	DESCRIPTION	SPEC	Q'TY	REMARK
1	CHASSIS PLATE	–	1	아 연 도 금
2	CABLE DUCT	–	1	
3	MAGNET CONTACTOR	DMC22C	2	TRAVERSING
4	E.O.C.R	SS–05	1	TRAVERSING
5	SILICON RECTIFIER	SR–30	1	TRAVERSING
6	TERMINAL BLOCK	25A , 15A	1	TRAVERSING

NOTE
1. 전선의 색상은 다음과 같다.
   1) 흑색 : 고류 및 직류 전원선로
   2) 적색 : 고류제어선
   3) 주황색 : 외부 전원에서 공급되는 연동장치 제어회로
   4) 녹색 또는 녹색과 황색 혼용 : 접지선
   5) 청색 : 직류 제어선로
2. CABLE MATERIAL : KIV OR EQUIVALENT
   MIN SIZE : 2.5sq
3. 제어용 전선 : 2.5mm KIV,HIV
4. 제작시 다소 변경 될수있음.
5. 외함 개방구조는 다음과 같을것.
   1) 외함 개방시 충전부분이 차단되도록 할것.
   2) 외함 개방후 충전되어있는 부분은 IP2X 이상의 직접 접촉 방호가 되어있을것.

MK	DATE	REVISIONS	CHK.	APP.

CUSTOMER		DRAWING	DESIGN	CHECKED	APPROVED	SCALE	DATE	ORDER NO.
DRAWING TITLE	TRAVERSING POWER CONTROL BOX					NONE		
	ARRANGEMENT DRAWING	극동호이스트 주식회사 KUK DONG HOIST CO., LTD.				DWG. NO	KDC2bt42	

산업안전보건공단 인증
KOREA OCCUPATIONAL SAFETY & HEALTH AGENCY
192.168.11.76 / 2014-04-19 09:50:43

불법복제 및 배포금지

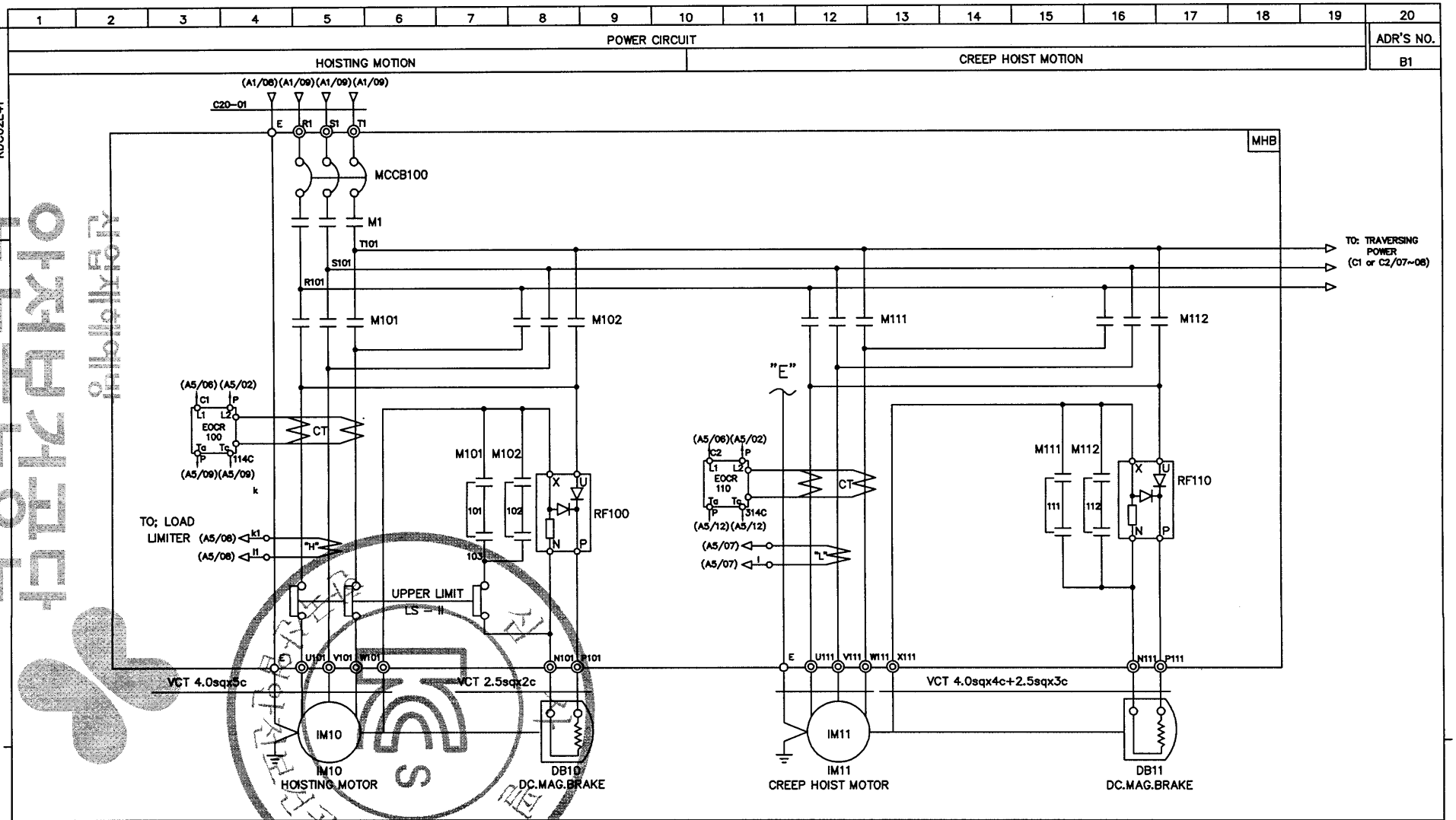

SPECIFICATION / SYMBOLS / DESCRIPTION	HOISTING POWER	HOISTING MOTOR	CREEP MOTOR	DC.MAG BRAKE	NO.FUSE BREAKER	TRANSFORMER	FUSE		MAIN MAGNET	MAGNET CONTACTOR		UPPER LIMIT	ELECTRIC OVER CURRENT RELAY		SILICON RECTIFIER		LOAD LIMITER	CABLE
	HOIST	IM 10	IM 11	DB10, 11	MCCB100	TR 1	F11,F12	F13	M1	M101,M102	M111,M112	LS-I, LS-II	EOCR100	EOCR110	RF100	RF110	LOAD LIMITER	C20-01
	2TON AC 3PH 440V 60Hz	3.7KW x 4P	0.4KWx4P	DC 100V	ABE-33AF/15A	440/110V,120V,60VA	1A	3A	DMC22C	DMC22C	DMC22C	AC 600V 75A	SS-30	SS-05	SR-30	SR-30	JDL-100	VFCT 4sqx4c
SELECTION / MAKER	KUKDONG				LS	SHINHAN	–		DONG-A			KUKDONG	ASECO				JUNGHO	DONGIL

MK	DATE	REVISIONS	CHK.	APP.
4				
3				
2				
1				

CUSTOMER		DRAWING	DESIGN	CHECKED	APPROVED	SCALE	DATE	ORDER NO.
DRAWING TITLE	CREEP HOISTING POWER CONTROL CIRCUIT DIAGRAM(FOR MONORAIL HOIST)					NONE		
		극동호이스트 주식회사 KUK DONG HOIST CO., LTD.				DWG. NO	KDC02E41	

192.168.11.76 / 2014-04-19 09:50:43
KOREA OCCUPATIONAL SAFETY & HEALTH AGENCY
한국산업안전보건공단

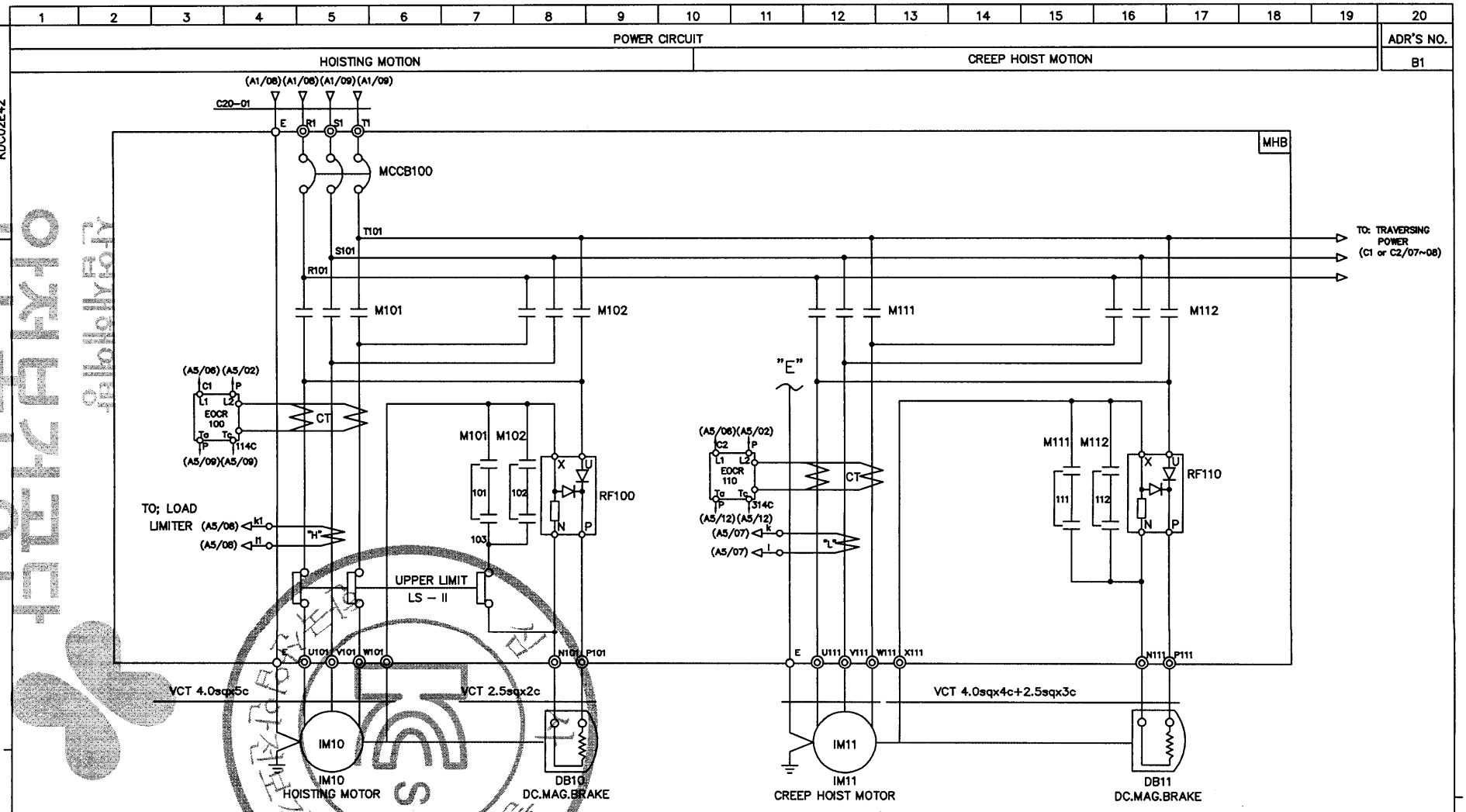

SPECIFICATION / SYMBOLS / DESCRIPTION / SELECTION / MAKER	HOISTING POWER	HOISTING MOTOR	CREEP MOTOR	DC.MAG' BRAKE	NO FUSE BREAKER	TRANSFORMER	FUSE		MAGNET CONTACTOR		UPPER LIMIT	ELECTRIC OVER CURRENT RELAY		SILICON RECTIFIER		LOAD LIMITER	CABLE
SYMBOLS																LOAD LIMITER	
DESCRIPTION	HOIST	IM 10	IM 11	DB10, 11	MCCB100	TR 1	F11,F12	F13	M101,M102	M111,M112	LS-I, LS-II	EOCR100	EOCR110	RF100	RF110		C20-01
	2TON AC 3PH 440V 60Hz	3.7KW x 4P	0.4KWx4P	DC 100V	ABE-33AF/15A	440/110V,120V,60VA	1A	3A	DMC22C	DMC22C	AC 600V 75A	SS-30	SS-05	SR-30	SR-30	JDL-100	VFCT 4.0sqx4c
SELECTION / MAKER	KUKDONG				DONG-A	SHINHAN	-		DONG-A		KUKDONG	ASECO				JUNGHO	DONGIL

MK	DATE	REVISIONS	CHK.	APP.
4				
3				
2				
1				

CUSTOMER		DRAWING	DESIGN	CHECKED	APPROVED	SCALE	DATE	ORDER NO.
DRAWING TITLE	CREEP HOISTING POWER CONTROL CIRCUIT					NONE		
	DIAGRAM(FOR CRANE)	국동호이스트 주식회사 KUK DONG HOIST CO., LTD.				DWG. NO	KDC02E42	

KOREA OCCUPATIONAL SAFETY & HEALTH AGENCY
192.168.11.76 / 2014-04-19 09:50:43
본 도면은 배포제한 자료입니다

1	2	3	4	5	6	7	8	9	10	11	12	13	14	15	16	17	18	19	20

POWER CIRCUIT — ADR'S NO.

TRAVERSING MOTION — C1

KDC02E43

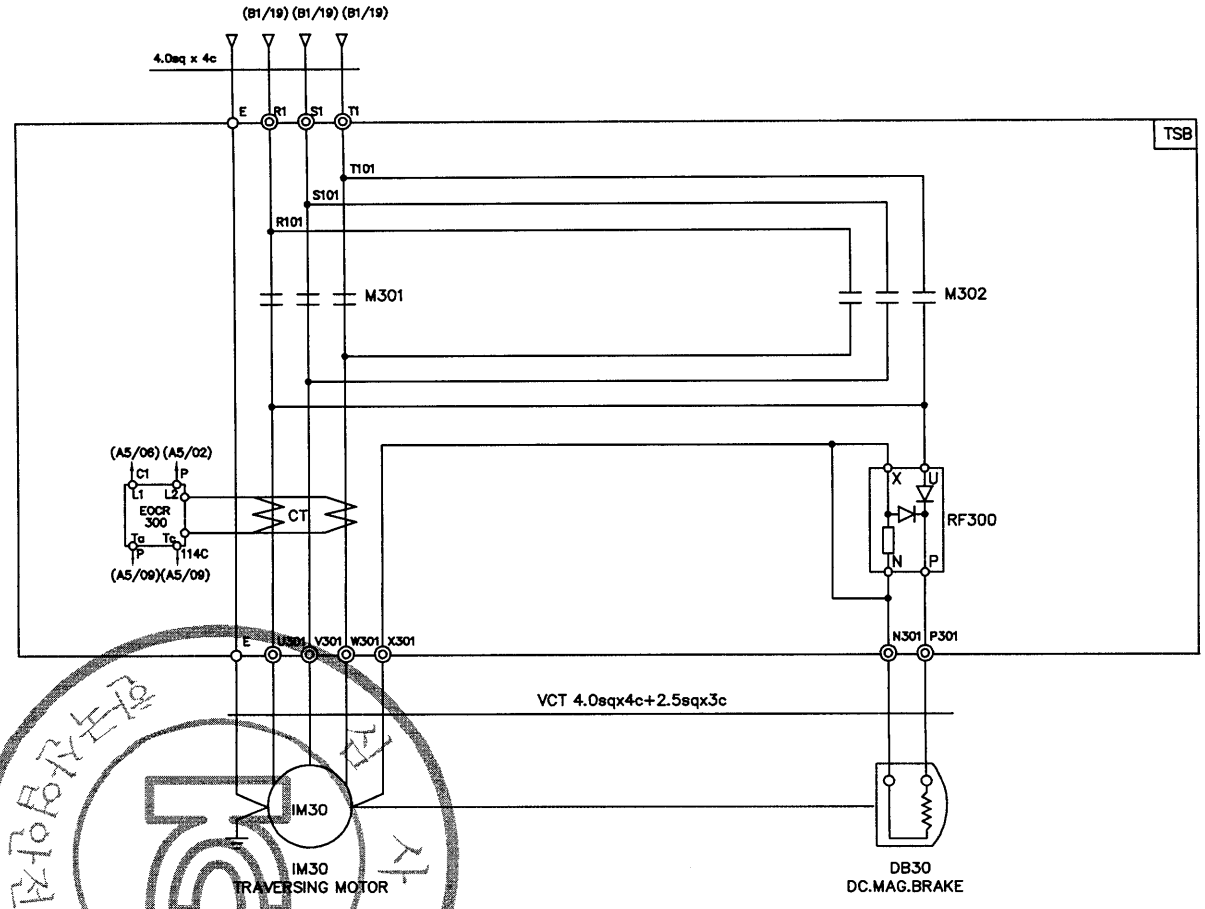

SPECIFICATION / SYMBOLS / DESCRIPTION		TRAVERSING MOTOR	DC MAG' BRAKE	MAGNET CONTACTOR	SILICON RECTIFIER	ELECTRIC OVER CURRENT RELAY	LIMIT SWTCH
		IM 30	DB 30	M301 , M302	RF 300	EOCR 300	LS-301 , LS-302
	440V	0.75KW x 4P AC 3PH 440V 60Hz	DC 100V	DMC22C	SR-30 AC 220V/DC 100V	SS-05	HY - W904
		0.5KW x 6P AC 3PH 440V 60Hz	DC 100V	DMC22C	SR-30 AC 220V/DC 100V	SS-05	HY - W904
SELECTION / MAKER		KUKDONG		DONG-A	ASECO		

MK	DATE	REVISIONS	CHK.	APP.	CUSTOMER		DRAWING	DESIGN	CHECKED	APPROVED	SCALE	DATE	ORDER NO.
					DRAWING TITLE	TRAVERSING POWER CONTROL CIRCUIT					NONE		
						DIAGRAM	극동호이스트 주식회사 KUK DONG HOIST CO., LTD.				DWG. NO	KDC02E43	

산업재해예방 산업보건공단 KOREA OCCUPATIONAL SAFETY & HEALTH AGENCY
192.168.11.76 / 2014-04-19 09:50:43

사용 및 배포금지

1	2	3	4	5	6	7	8	9	10	11	12	13	14	15	16	17	18	19	20

POWER CIRCUIT

TRAVERSING MOTION

ADR'S NO. C2

KDC02E44

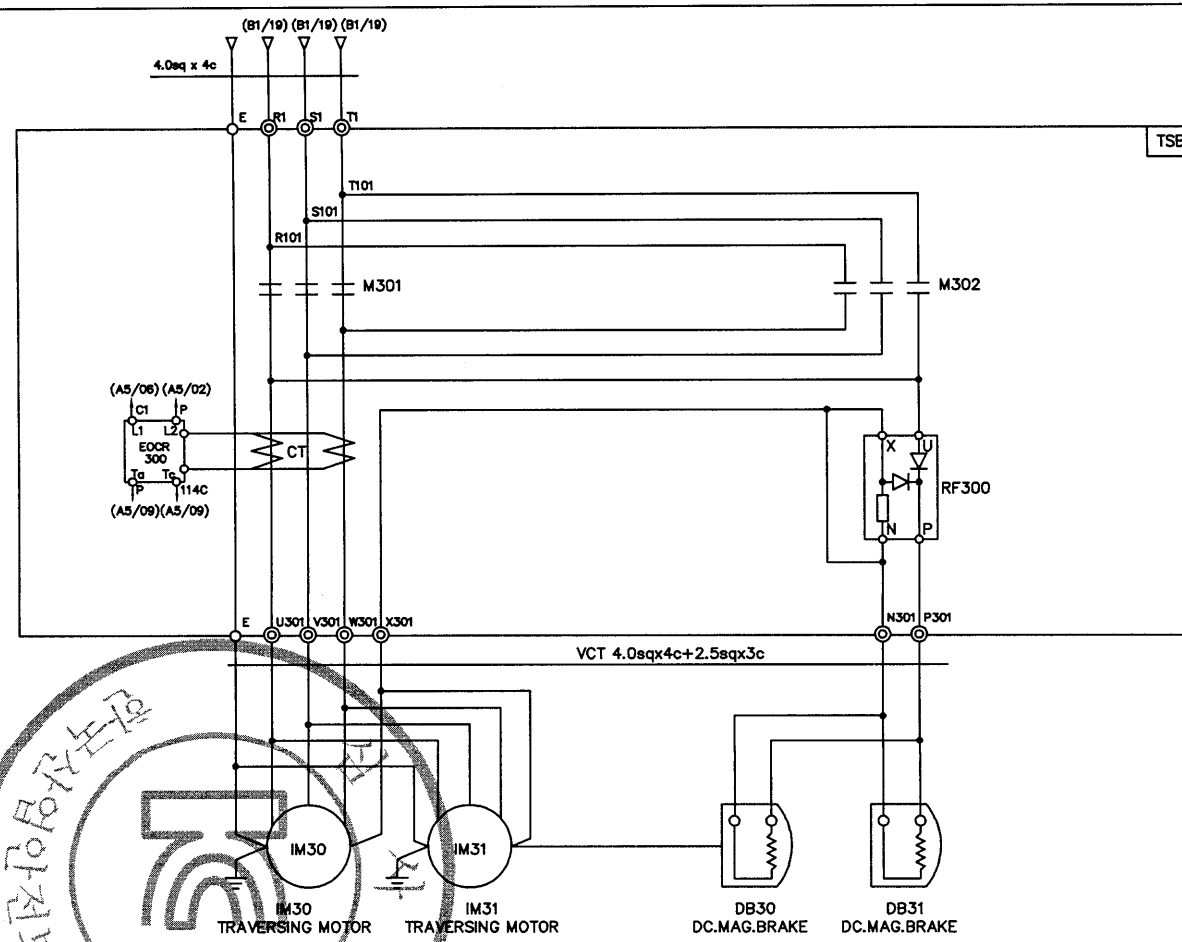

SPECIFICATION / SYMBOLS / DESCRIPTION		TRAVERSING MOTOR	DC MAG' BRAKE	MAGNET CONTACTOR	SILICON RECTIFIER	ELECTRIC OVER CURRENT RELAY	LIMIT SWTCH
		IM 30 , 1M31	DB 30	M301 , M302	RF 300	EOCR 300	LS-301 , LS-302
	440V	0.75KW x 4P AC 3PH 440V 60Hz	DC 100V	DMC22C	SR-30 AC 220V/DC 100V	SS-05	HY - W904
		0.5KW x 6P AC 3PH 440V 60Hz	DC 100V	DMC22C	SR-30 AC 220V/DC 100V	SS-05	HY - W904
SELECTION / MAKER		KUKDONG		DONG-A	ASECO		

MK	DATE	REVISIONS	CHK.	APP.
4				
3				
2				
1				

CUSTOMER		DRAWING	DESIGN	CHECKED	APPROVED	SCALE	DATE	ORDER NO.
DRAWING TITLE	TRAVERSING POWER CONTROL CIRCUIT DIAGRAM					NONE		

극동호이스트 주식회사
KUK DONG HOIST CO., LTD.

DWG. NO KDC02E44

KOREA OCCUPATIONAL SAFETY & HEALTH AGENCY
192.168.11.76 / 2014-04-19 09:50:43
무단복제 및 배포금지

1	2	3	4	5	6	7	8	9	10	11	12	13	14	15	16	17	18	19	20

POWER CIRCUIT — ADR'S NO.

TRAVERSING MOTION — C1

KDC02E045

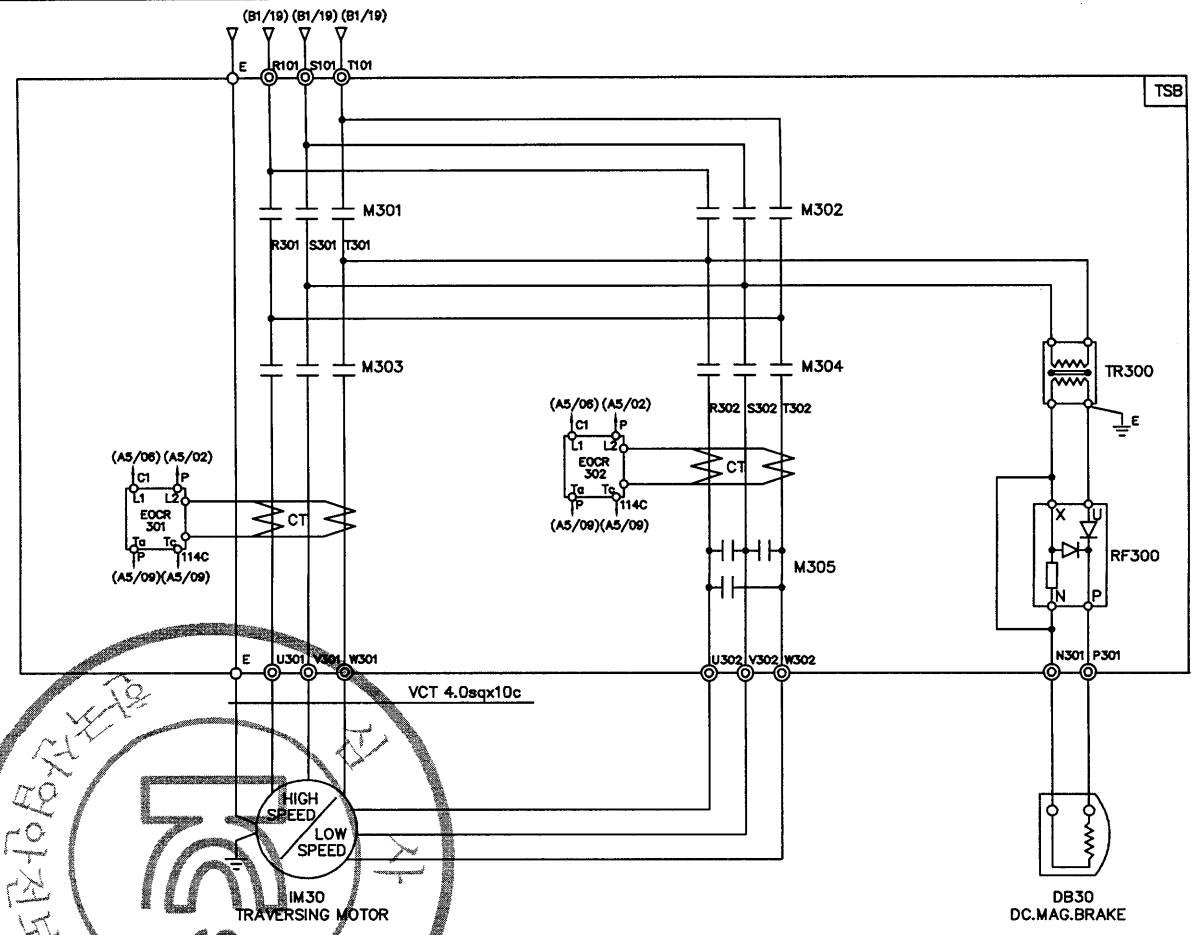

SPECIFICATION / SYMBOLS / DESCRIPTION		TRAVERSING MOTOR	DC MAG' BRAKE	MAGNET CONTACTOR		SILICON RECTIFIER	ELECTRIC OVER CURRENT RELAY	TRANSFORMER
		IM 30	DB30	M301 , M302 , M303	M304 , M305	RF 300	EOCR 301,302	TR300
	440V	0.5/025KWx6/12P AC3PH 440V 60Hz	DC 100V	DMC22C	DMC22C	SR-30	SS-05	AC440/220V, 300VA
	440V	0.8/0.4KWx4/8P AC3PH 440V 60Hz	DC 100V	DMC22C	DMC22C	SR-30	SS-05	AC440/220V, 300VA
SELECTION MAKER		KUKDONG		DONG-A		ASECO		SHINHAN

MK	DATE	REVISIONS	CHK.	APP.
4				
3				
2				
1				

CUSTOMER		DRAWING	DESIGN	CHECKED	APPROVED	SCALE	DATE	ORDER NO.
DRAWING TITLE	TRAVERSING POWER CONTROL CIRCUIT					NONE		
	DIAGRAM	극동호이스트 주식회사 KUK DONG HOIST CO., LTD.				DWG. NO	KDC02E45	

아산보건기술원
사업개시에 관한
KOREA OCCUPATIONAL SAFETY & HEALTH AGENCY
192.168.11.76 / 2014-04-19 09:50:43
불법복제 및 배포금지

불법복제 및 배포금지

1	2	3	4	5	6	7	8	9	10	11	12	13	14	15	16	17	18	19	20

POWER CIRCUIT — ADR'S NO.

TRAVERSING MOTION — C2

KDC02E046

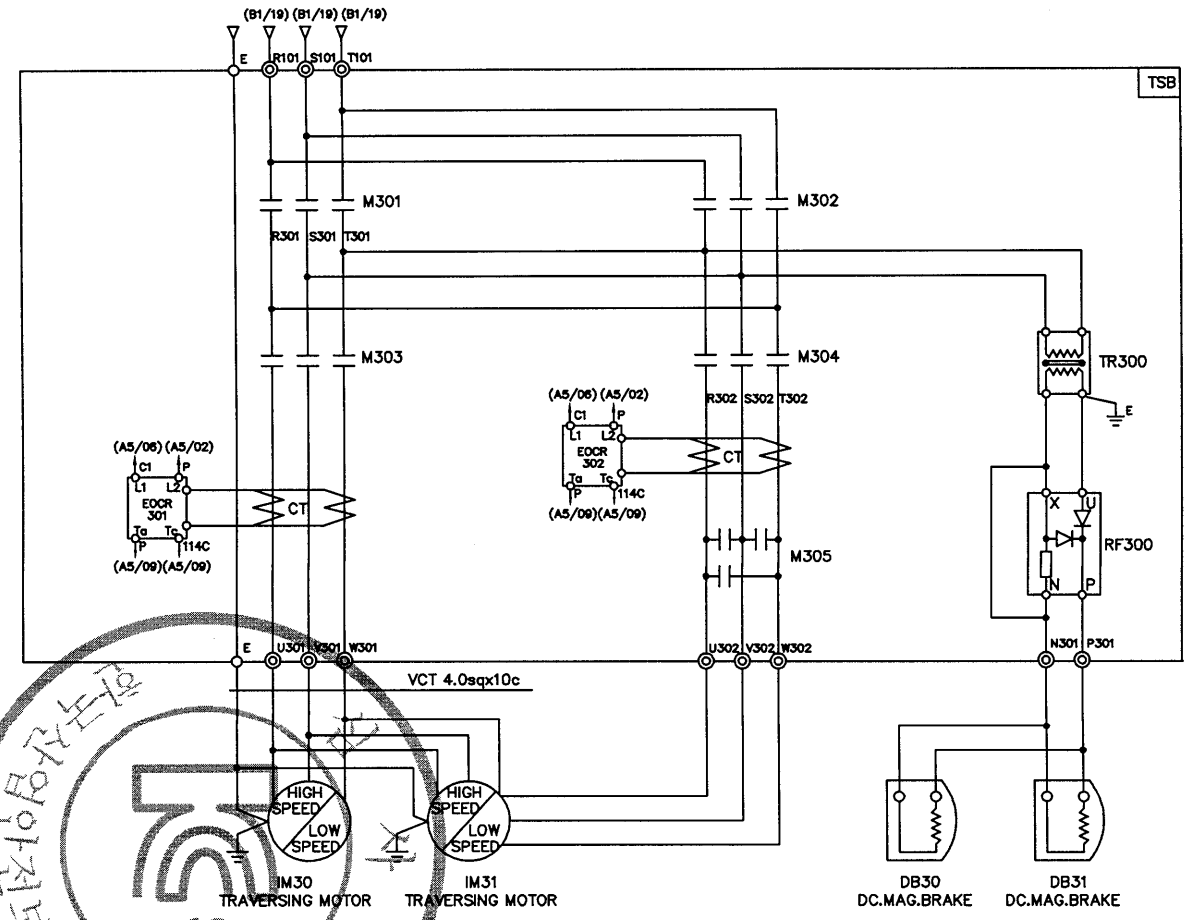

SPECIFICATION / SYMBOLS / DESCRIPTION		TRAVERSING MOTOR	DC MAG' BRAKE	MAGNET CONTACTOR		SILICON RECTIFIER	ELECTRIC OVER CURRENT RELAY	TRANSFORMER
		IM30 , 1M31	DB30 , DB31	M301 , M302 , M303	M304 , M305	RF 300	EOCR 301,302	TR300
	440V	0.5/0.25KWx6/12P AC3PH 440V 60Hz	DC 100V	DMC22C	DMC22C	SR-30	SS-05	AC440/220V, 300VA
	440V	0.6/0.4KWx4/8P AC3PH 440V 60Hz	DC 100V	DMC22C	DMC22C	SR-30	SS-05	AC440/220V, 300VA
SELECTION MAKER		KUKDONG		DONG-A		ASECO		SHINHAN

MK	DATE	REVISIONS	CHK.	APP.
4				
3				
2				
1				

CUSTOMER		DRAWING	DESIGN	CHECKED	APPROVED	SCALE	DATE	ORDER NO.
DRAWING TITLE	TRAVERSING POWER CONTROL CIRCUIT					NONE		
	DIAGRAM	국동호이스트 주식회사 KUK DONG HOIST CO., LTD.				DWG. NO	KDC02E46	

한국산업안전보건공단 KOREA OCCUPATIONAL SAFETY & HEALTH AGENCY
192.168.11.76 / 2014-04-19 09:50:43

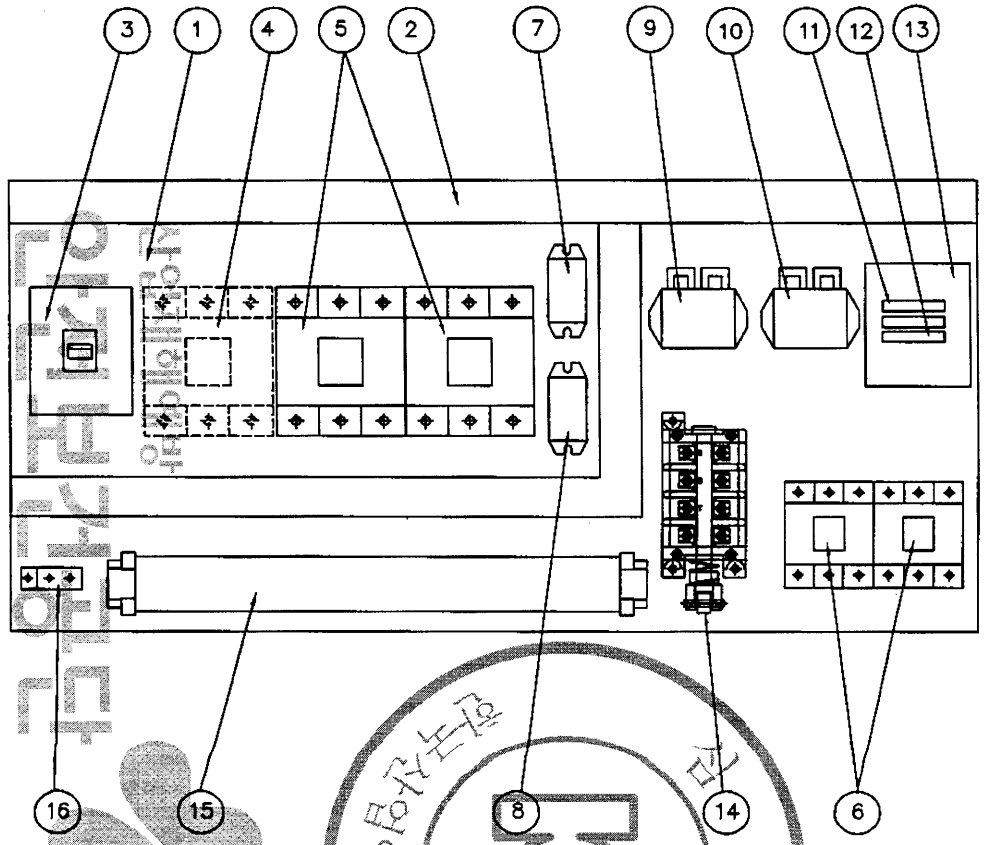

NO	DESCRIPTION	SPECIFICATION	Q'TY	REMARK
1	CHASSIS PLATE		1	아 연 도 금
2	CABLE DUCT	–	1	
3	N.F.B	33AF/15AT	1	HOISTING
4	MAGNET CONTACTOR	DMC22C	1	MAIN MAG.
5	MAGNET CONTACTOR	DMC22C	2	HOISTING
6	MAGNET CONTACTOR	DMC22C	2	CREEP HOIST
7	SILICON RECTIFIER	SR–30	1	HOISTING
8	SILICON RECTIFIER	SR–30	1	CREEP HOIST
9	E.O.C.R	SS–30	1	HOISTING
10	E.O.C.R	SS–05	1	CREEP HOIST
11	FUSE	1 A	2	
12	FUSE	3 A	1	
13	TRANSFORMER	220V/110V(120V), 60VA	1	
14	UPPER LIMITER	AC 600V, 75A	1	LS–1,2
15	TERMINAL BLOCK	60A,15A		
16	EARTH TERMINAL	3tx20x50	1	

NOTE
1. UPPER LIMIT LS–1,LS–2의 접점 허용전류 용량 : AC 600V, 75A
2. POWER SOURCE : AC. 3φ 460V 60HZ
3. EARTH TERMINAL RESISTANCE : 0.018Ω

NOTE
1. 전선의 색상은 다음과 같다.
   1) 흑색 : 교류 및 직류 전원선로
   2) 적색 : 교류제어선
   3) 주황색 : 외부 전원에서 공급되는 연동장치 제어회로
   4) 녹색 또는 녹색과 황색 혼용 : 접지선
   5) 청색 : 직류 제어선로
2. CABLE MATERIAL : KIV OR EQUIVALENT
   MIN SIZE : 2.5sq
3. 제어용 전선 : 2.5mm KIV,HIV
4. 제작시 다소 변경 될수있음.
5. 외함 개방구조는 다음과 같을것.
   1) 외함 개방시 충전부분이 차단되도록 할것.
   2) 외함 개방후 충전되어있는 부분은 IP2X 이상의 직접 접촉 방호가 되어있을것.

MK	DATE	REVISIONS	CHK.	APP.

CUSTOMER		DRAWING	DESIGN	CHECKED	APPROVED	SCALE	DATE	ORDER NO.
DRAWING TITLE	CREEP HOIST CONTROL BOX					NONE		
	ARRANGEMENT DRAWING	극동호이스트 주식회사 KUK DONG HOIST CO., LTD.				DWG. NO	KDC2BA51	

192.168.11.76 / 2014-04-19 09:50:43
KOREA OCCUPATIONAL SAFETY & HEALTH AGENCY
본 복제품은 원본과 동일한 것임을 증명합니다.

1	2	3	4	5	6	7	8	9	10	11	12	13	14	15	16	17	18	19	20.

ADR'S NO.

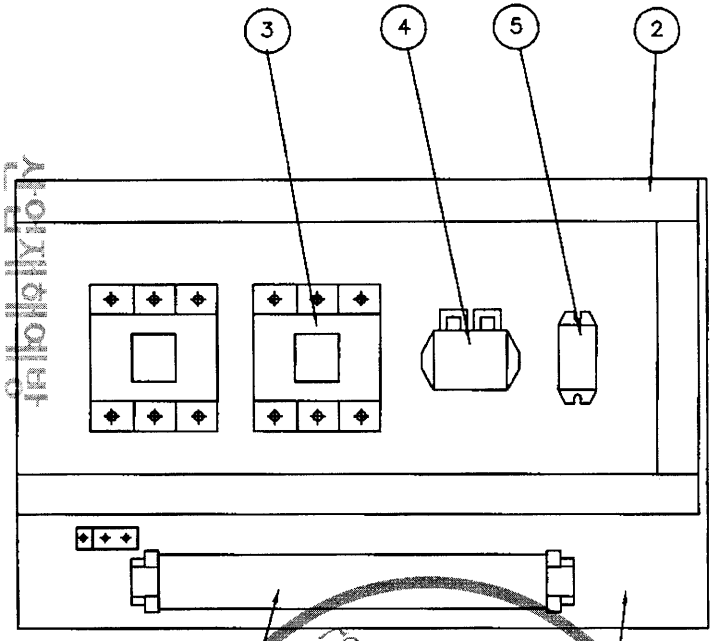

NO	DESCRIPTION	SPEC	Q'TY	REMARK
1	CHASSIS PLATE	–	1	아 연 도 금
2	CABLE DUCT	–	1	
3	MAGNET CONTACTOR	DMC22C	2	TRAVERSING
4	E.O.C.R	SS-05	1	TRAVERSING
5	SILICON RECTIFIER	SR-30	1	TRAVERSING
6	TERMINAL BLOCK	25A , 15A	1	TRAVERSING

NOTE 1. 전선의 색상은 다음과 같다.
1) 흑색 : 고류 및 직류 전원선로
2) 적색 : 고류제어선
3) 주황색 : 외부 전원에서 공급되는 연동장치 제어회로
4) 녹색 또는 녹색과 황색 혼용 : 접지선
5) 청색 : 직류 제어선로

2. CABLE MATERIAL : KIV OR EQUIVALENT
MIN SIZE : 2.5sq
3. 제어용 전선 : 2.5mm KIV,HIV
4. 제작시 다소 변경 될수있음.
5. 외함 개방구조는 다음과 같을것.
1) 외함 개방시 충전부분이 차단되도록 할것.
2) 외함 개방후 충전되어있는 부분은 IP2X 이상의 직접 접촉 방호가 되어있을것.

MK	DATE	REVISIONS	CHK.	APP.
4				
3				
2				
1				

CUSTOMER		DRAWING	DESIGN	CHECKED	APPROVED	SCALE	DATE	ORDER NO.
DRAWING TITLE	TRAVERSING POWER CONTROL BOX					NONE		
	ARRANGEMENT DRAWING	극동호이스트 주식회사 KUK DONG HOIST CO., LTD.				DWG. NO	KDC2bt52	

산업재해예방 안전보건공단
KOREA OCCUPATIONAL SAFETY & HEALTH AGENCY
192.168.11.76 / 2014-04-19 09:50:43
불법복제 및 배포금지

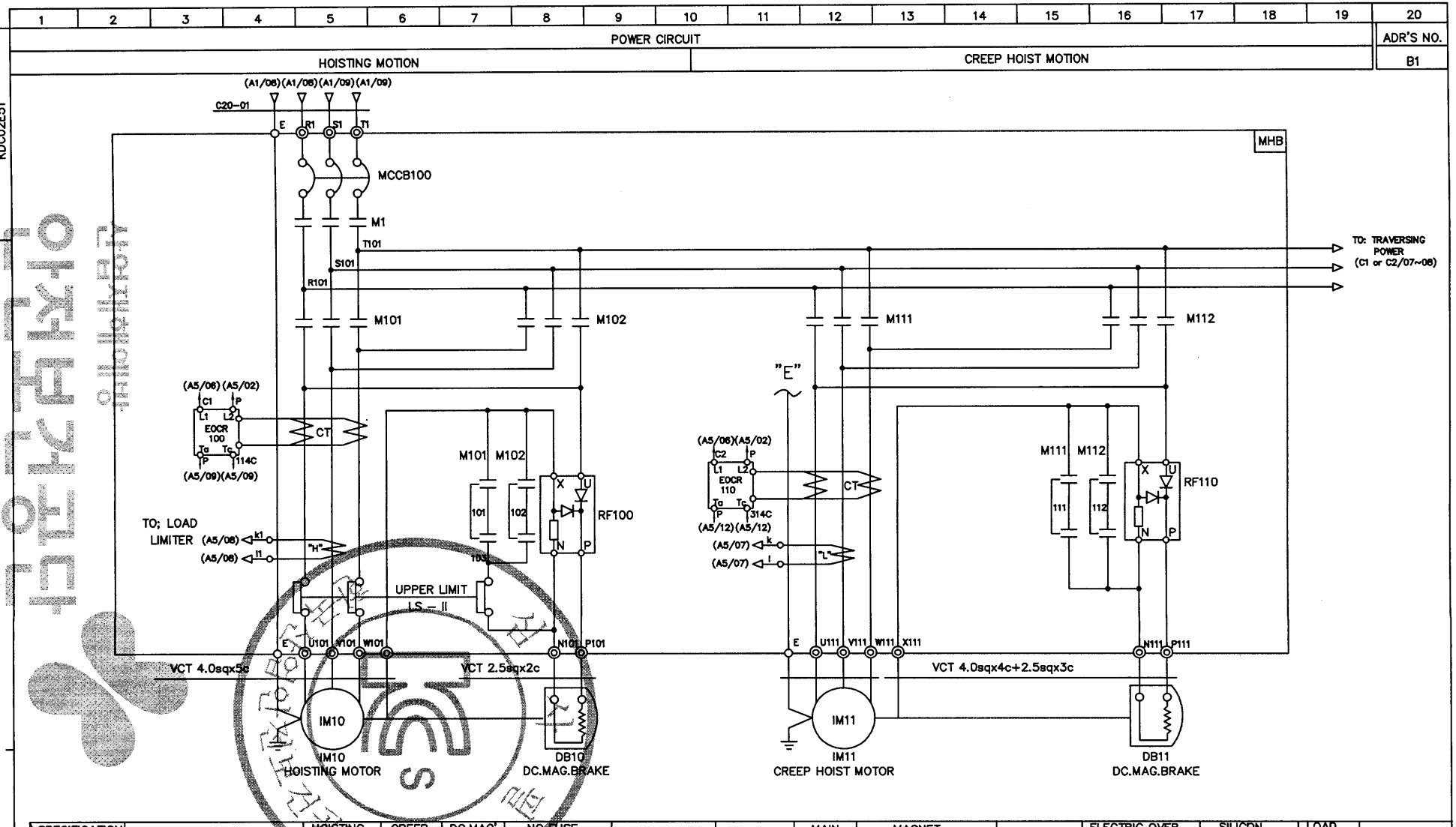

SPECIFICATION / SYMBOLS / DESCRIPTION	HOISTING POWER	HOISTING MOTOR	CREEP MOTOR	DC.MAG' BRAKE	NO FUSE BREAKER	TRANSFORMER	FUSE		MAIN MAGNET	MAGNET CONTACTOR		UPPER LIMIT	ELECTRIC OVER CURRENT RELAY		SILICON RECTIFIER		LOAD LIMITER	CABLE
	HOIST	IM 10	IM 11	DB10, 11	MCCB100	TR 1	F11,F12	F13	M1	M101,M102	M111,M112	LS-I, LS-II	SS-30	EOCR110	RF100	RF110	LOAD LIMITER	C20-01
	2TON AC 3PH 460V 60Hz	3.7KW x 4P	0.4KWx4P	DC 100V	ABE-33AF/15A	460/110V,120V,60VA	1A	3A	DMC22C	DMC22C	DMC22C	AC 600V 75A	SS-30	SS-05	SR-30	SR-30	JDL-100	VFCT 4sqx4c
SELECTION / MAKER	KUKDONG				LS	SHINHAN	–		DONG-A			KUKDONG	ASECO				JUNGHO	DONGIL

MK	DATE	REVISIONS	CHK.	APP.
4				
3				
2				
1				

CUSTOMER		DRAWING	DESIGN	CHECKED	APPROVED	SCALE	DATE	ORDER NO.
DRAWING TITLE	CREEP HOISTING POWER CONTROL CIRCUIT DIAGRAM(FOR MONORAIL HOIST)					NONE		
		극동호이스트 주식회사 KUK DONG HOIST CO., LTD.				DWG. NO	KDC02E51	

192.168.11.76 / 2014-04-19 09:50:43
KOREA OCCUPATIONAL SAFETY & HEALTH AGENCY
무단배포 및 복제 금지

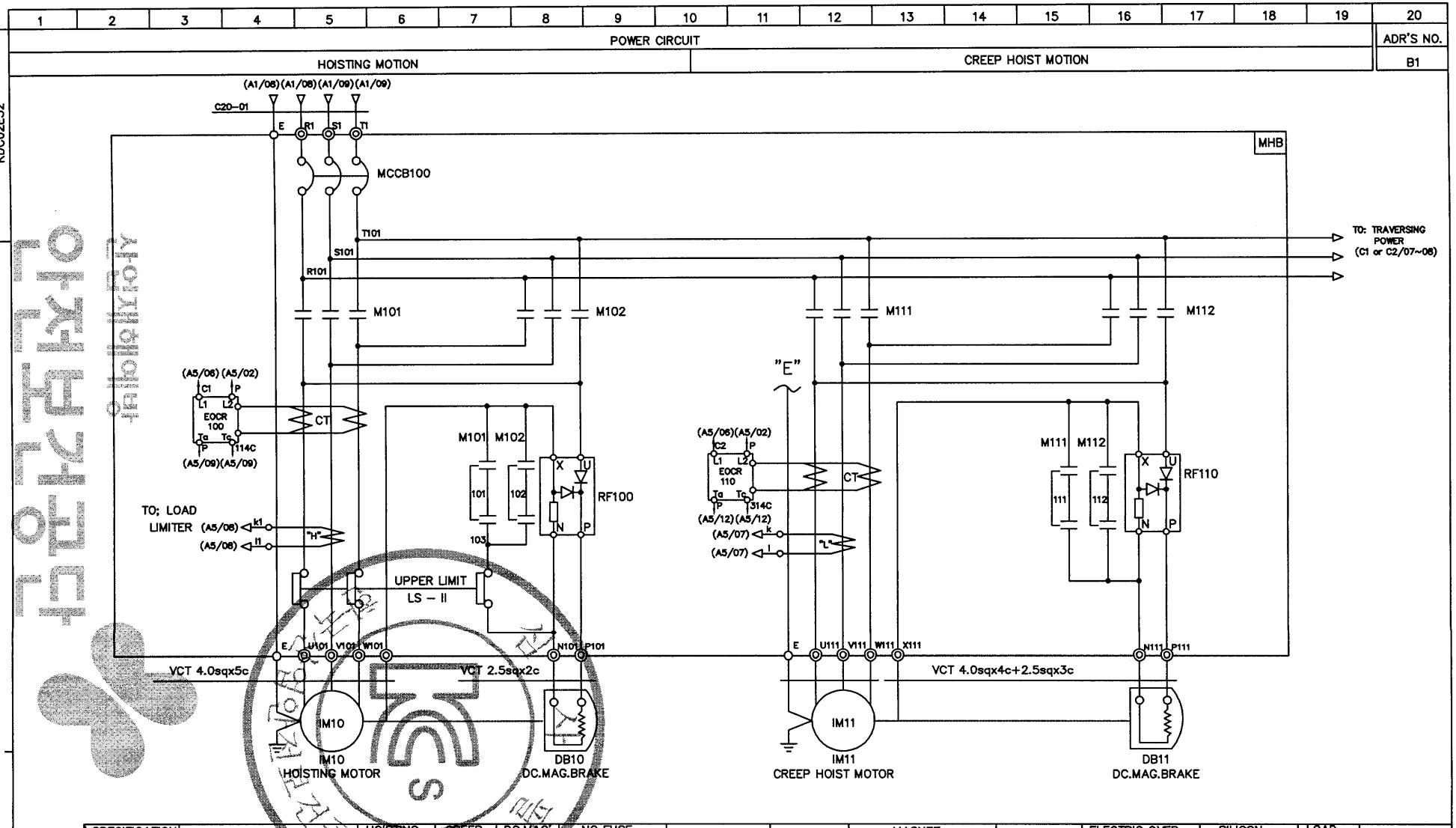

SPECIFICATION / SYMBOLS	HOISTING POWER	HOISTING MOTOR	CREEP MOTOR	DC.MAG' BRAKE	NO FUSE BREAKER	TRANSFORMER	FUSE		MAGNET CONTACTOR		UPPER LIMIT	ELECTRIC OVER CURRENT RELAY		SILICON RECTIFIER		LOAD LIMITER	CABLE
DESCRIPTION	HOIST	IM 10	IM 11	DB10, 11	MCCB100	TR 1	F11,F12	F13	M101,M102	M111,M112	LS-I, LS-II	EOCR100	EOCR110	RF100	RF110	LOAD LIMITER	C20-01
	2TON AC 3PH 460V 60HZ	3.7KW x 4P	0.4KWx4P	DC 100V	ABE-33AF/15A	460/110V,120V,60VA	1A	3A	DMC22C	DMC22C	AC 600V 75A	SS-30	SS-05	SR-30	SR-30	JDL-100	VFCT 4sqx4c
SELECTION / MAKER	KUKDONG				LS	SHINHAN	-		DONG-A		KUKDONG	ASECO				JUNGHO	DONGIL

MK	DATE	REVISIONS	CHK.	APP.
4				
3				
2				
1				

CUSTOMER		DRAWING	DESIGN	CHECKED	APPROVED	SCALE	DATE	ORDER NO.
DRAWING TITLE	CREEP HOISTING POWER CONTROL CIRCUIT DIAGRAM(FOR CRANE)					NONE		
		극동호이스트 주식회사 KUK DONG HOIST CO., LTD.				DWG. NO	KDC02E52	

불법복제 및 배포금지
192.168.11.76 / 2014-04-19 09:50:43
KOREA OCCUPATIONAL SAFETY & HEALTH AGENCY
한국산업안전보건공단
사업재해예방

1	2	3	4	5	6	7	8	9	10	11	12	13	14	15	16	17	18	19	20

POWER CIRCUIT — ADR'S NO.

TRAVERSING MOTION — C1

KDC02E53

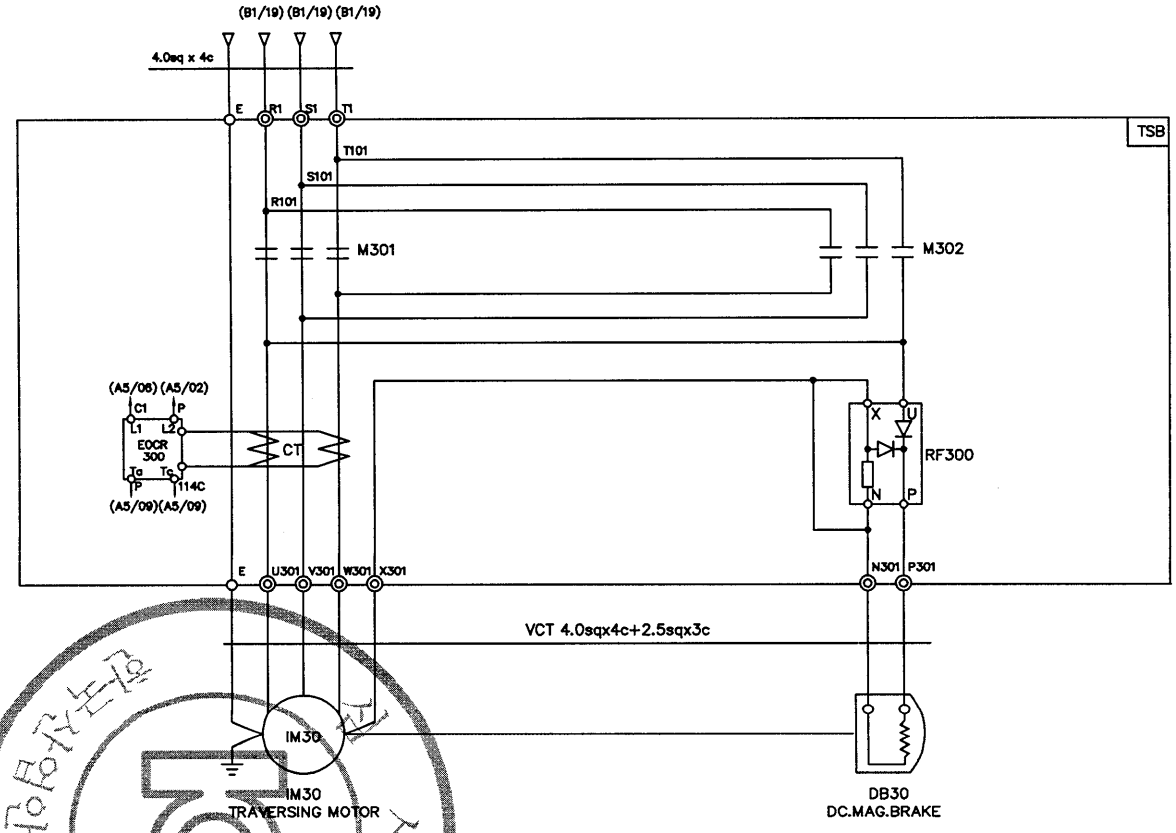

SPECIFICATION / SYMBOLS / DESCRIPTION	460V	TRAVERSING MOTOR	DC MAG' BRAKE	MAGNET CONTACTOR	SILICON RECTIFIER	ELECTRIC OVER CURRENT RELAY	LIMIT SWTCH
		IM 30	DB 30	M301 , M302	RF 300	EOCR 300	LS-301 , LS-302
		0.75KW x 4P AC 3PH 460V 60Hz	DC 100V	DMC22C	SR-30 AC 220V/DC 100V	SS-05	HY - W904
		0.5KW x 6P AC 3PH 460V 60Hz	DC 100V	DMC22C	SR-30 AC 220V/DC 100V	SS-05	HY - W904
SELECTION / MAKER		KUKDONG		DONG-A	ASECO		

MK	DATE	REVISIONS	CHK.	APP.
4				
3				
2				
1				

CUSTOMER		DRAWING	DESIGN	CHECKED	APPROVED	SCALE	DATE	ORDER NO.
DRAWING TITLE	TRAVERSING POWER CONTROL CIRCUIT DIAGRAM					NONE		
		국동호이스트 주식회사 KUK DONG HOIST CO., LTD.				DWG. NO	KDC02E53	

산업재해예방
한국산업안전보건공단
KOREA OCCUPATIONAL SAFETY & HEALTH AGENCY
192.168.11.76 / 2014-04-19 09:50:43
불법복제 및 배포금지

1	2	3	4	5	6	7	8	9	10	11	12	13	14	15	16	17	18	19	20
POWER CIRCUIT																			ADR'S NO.
TRAVERSING MOTION																			C2

KDC02E54

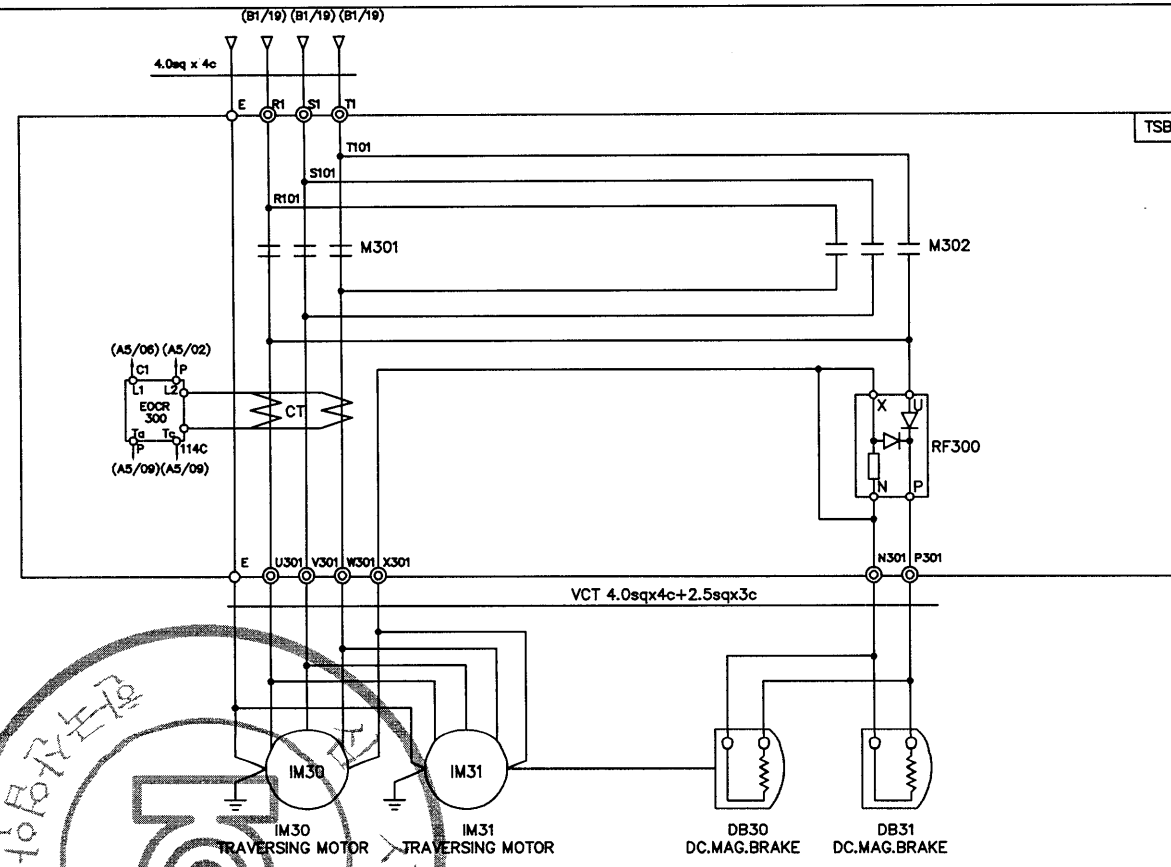

SPECIFICATION / SYMBOLS / DESCRIPTION		TRAVERSING MOTOR	DC MAG' BRAKE	MAGNET CONTACTOR	SILICON RECTIFIER	ELECTRIC OVER CURRENT RELAY	LIMIT SWTCH
		IM 30 , 1M31	DB 30	M301 , M302	RF 300	EOCR 300	LS-301 , LS-302
	460V	0.75KW x 4P AC 3PH 460V 60Hz	DC 100V	DMC22C	SR-30 AC 220V/DC 100V	SS-05	HY - W904
		0.5KW x 6P AC 3PH 460V 60Hz	DC 100V	DMC22C	SR-30 AC 220V/DC 100V	SS-05	HY - W904
SELECTION / MAKER		KUKDONG		DONG-A	ASECO		

MK	DATE	REVISIONS	CHK.	APP.
4				
3				
2				
1				

CUSTOMER		DRAWING	DESIGN	CHECKED	APPROVED	SCALE	DATE	ORDER NO.
						NONE		
DRAWING TITLE	TRAVERSING POWER CONTROL CIRCUIT							
	DIAGRAM	KD 국동호이스트 주식회사 KUK DONG HOIST CO., LTD.				DWG. NO	KDC02E54	

KOREA OCCUPATIONAL SAFETY & HEALTH AGENCY
192.168.11.76 / 2014-04-19 09:50:43

무단복제 및 배포금지

1	2	3	4	5	6	7	8	9	10	11	12	13	14	15	16	17	18	19	20

POWER CIRCUIT

TRAVERSING MOTION

ADR'S NO. C1

KDC02E055

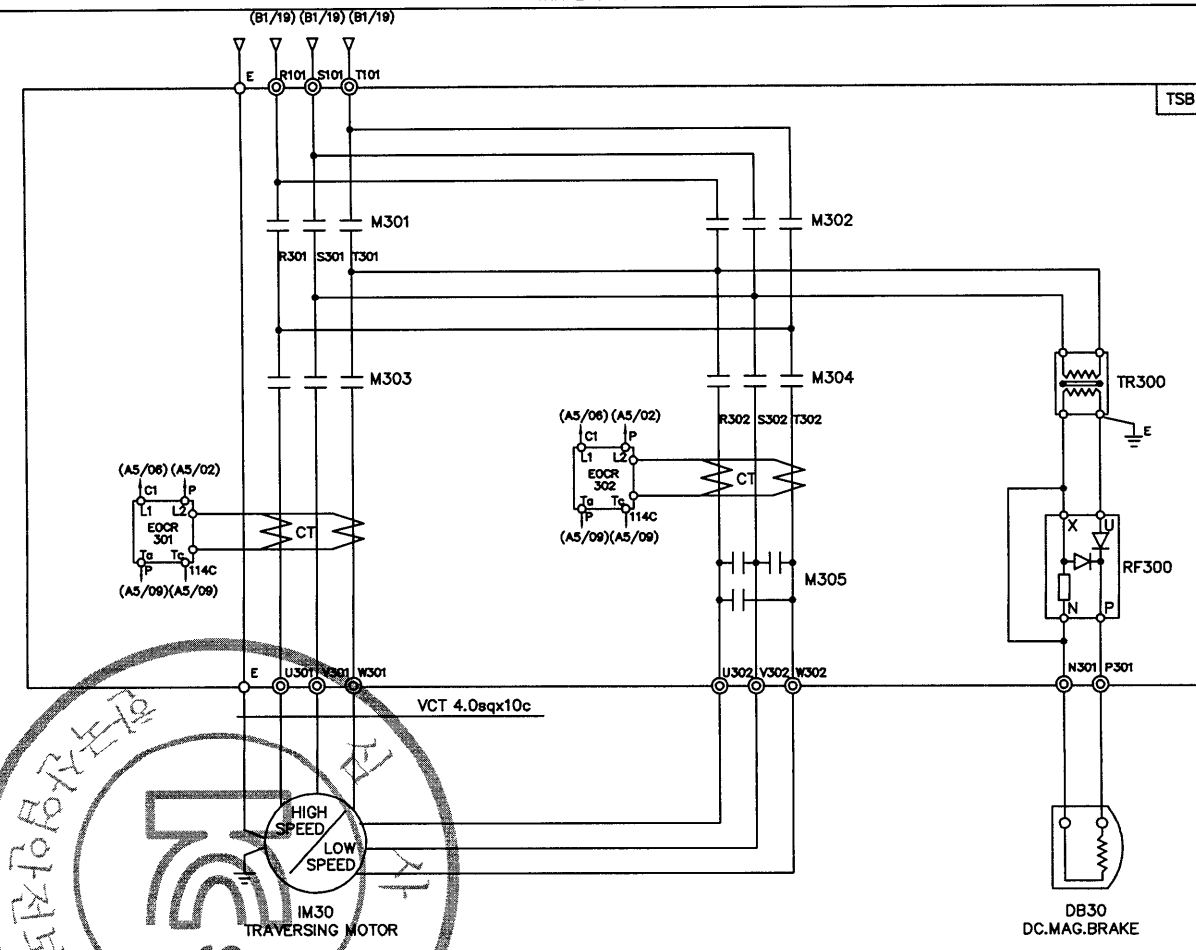

SPECIFICATION / SYMBOLS		TRAVERSING MOTOR	DC MAG' BRAKE	MAGNET CONTACTOR		SILICON RECTIFIER	ELECTRIC OVER CURRENT RELAY	TRANSFORMER
DESCRIPTION		IM 30	DB30	M301 , M302 , M303	M304 , M305	RF 300	EOCR 301,302	TR300
	460V	0.5/0.25KWx6/12P AC 3PH 460V 60Hz	DC 100V	DMC22C	DMC22C	SR-30	SS-05	AC460/220V, 300VA
	460V	0.8/0.4KWx4/8P AC 3PH 460V 60Hz	DC 100V	DMC22C	DMC22C	SR-30	SS-05	AC460/220V, 300VA
SELECTION MAKER		KUKDONG		DONG-A		ASECO		SHINHAN

MK	DATE	REVISIONS	CHK.	APP.
4				
3				
2				
1				

CUSTOMER		DRAWING	DESIGN	CHECKED	APPROVED	SCALE	DATE	ORDER NO.
DRAWING TITLE	TRAVERSING POWER CONTROL CIRCUIT					NONE		
	DIAGRAM	극동호이스트 주식회사 KUK DONG HOIST CO., LTD.				DWG. NO	KDC02E55	

아주대학교
산업재해예방
KOREA OCCUPATIONAL SAFETY & HEALTH AGENCY
192.168.11.76 / 2014-04-19 09:50:43
불법복제 및 배포금지

1	2	3	4	5	6	7	8	9	10	11	12	13	14	15	16	17	18	19	20

POWER CIRCUIT — ADR'S NO.

TRAVERSING MOTION — C2

KDC02E056

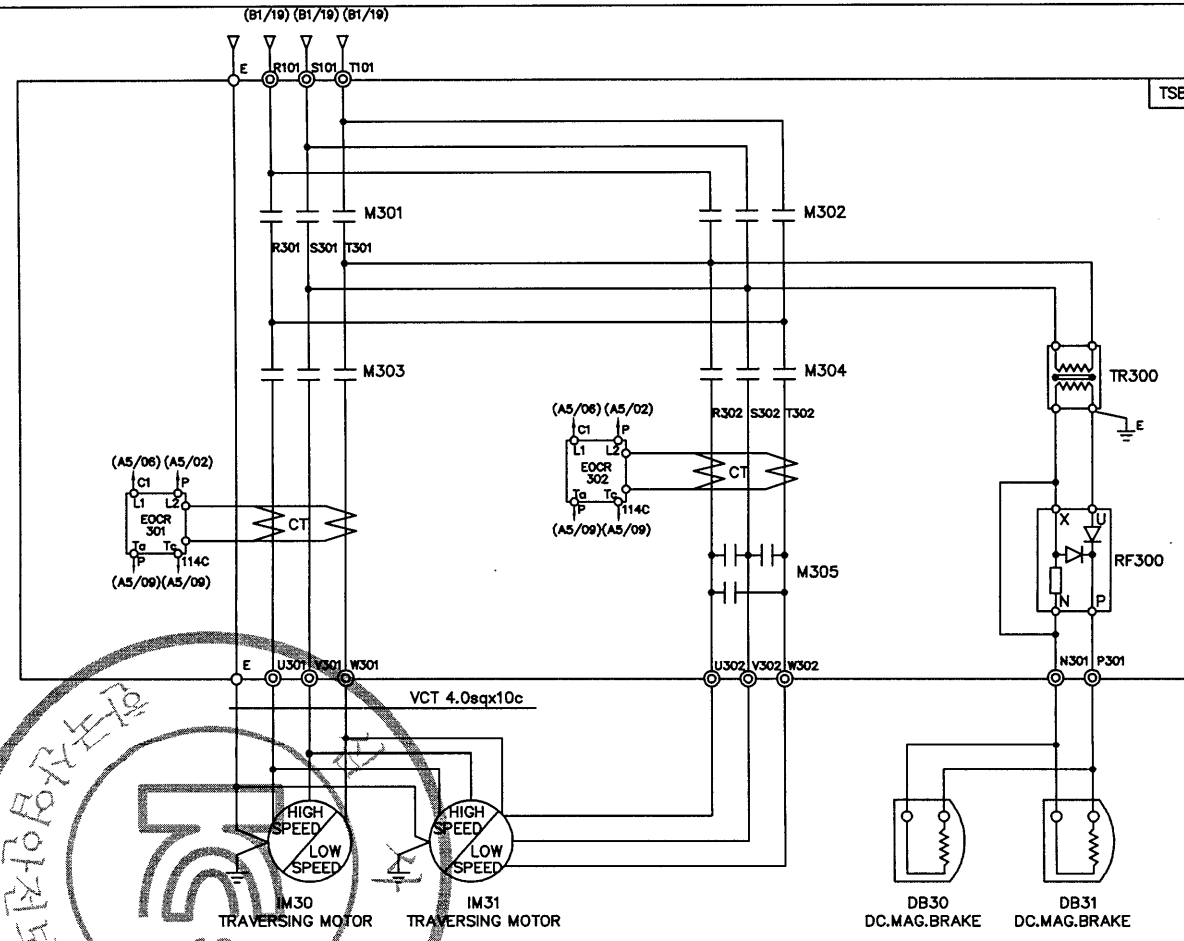

SPECIFICATION / SYMBOLS / DESCRIPTION		TRAVERSING MOTOR	DC MAG' BRAKE	MAGNET CONTACTOR		SILICON RECTIFIER	ELECTRIC OVER CURRENT RELAY	TRANSFORMER
		IM 30 , 1M31	DB30 , DB31	M301 , M302 , M303	M304 , M305	RF 300	EOCR 301,302	TR300
	460V	0.5/0.25KWx6/12P AC 3PH 460V 60Hz	DC 100V	DMC22C	DMC22C	SR-30	SS-05	AC460/220V, 300VA
	460V	0.8/0.4KWx4/8P AC 3PH 460V 60Hz	DC 100V	DMC22C	DMC22C	SR-30	SS-05	AC460/220V, 300VA
SELECTION MAKER		KUKDONG		DONG-A		ASECO		SHINHAN

MK	DATE	REVISIONS	CHK.	APP.
4				
3				
2				
1				

CUSTOMER		DRAWING	DESIGN	CHECKED	APPROVED	SCALE	DATE	ORDER NO.
DRAWING TITLE	TRAVERSING POWER CONTROL CIRCUIT DIAGRAM					NONE		
		국동호이스트 주식회사 KUK DONG HOIST CO., LTD.				DWG. NO	KDC02E56	

아주대학교
산업재해예방
KOREA OCCUPATIONAL SAFETY & HEALTH AGENCY
192.168.11.76 / 2014-04-19 09:50:43
불법복제 및 배포금지

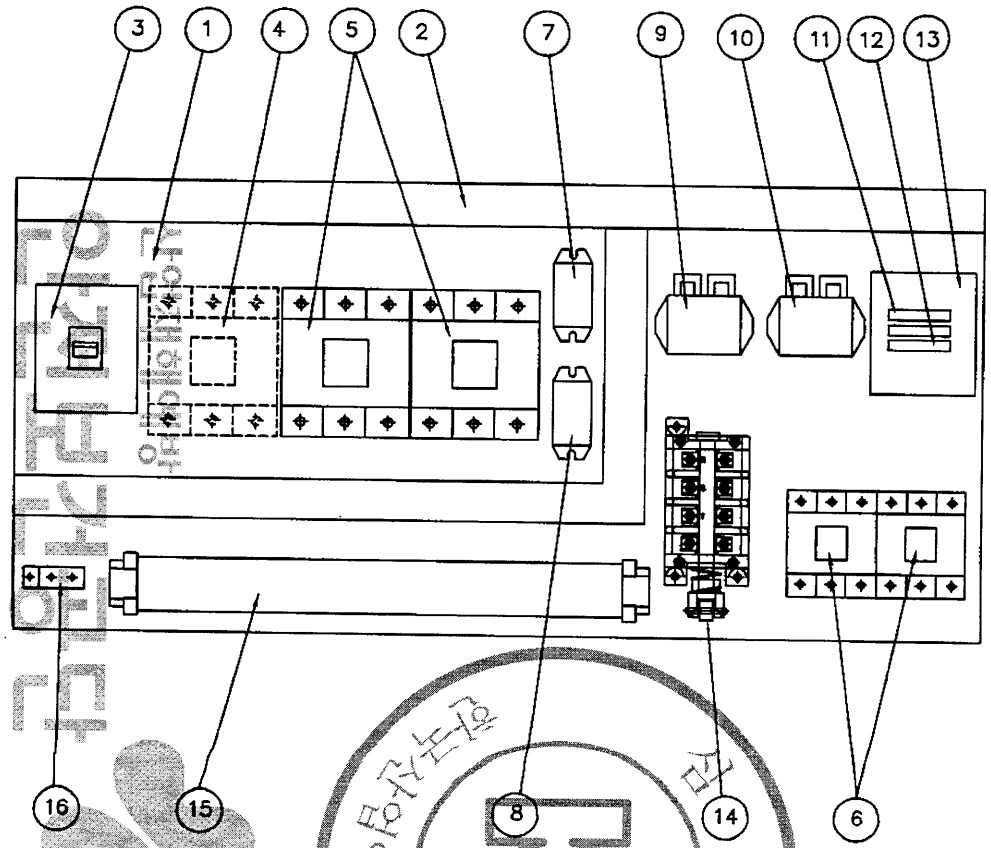

NO	DESCRIPTION	SPECIFICATION	Q'TY	REMARK
1	CHASSIS PLATE		1	아 연 도 금
2	CABLE DUCT	–	1	
3	N.F.B	33AF/15AT	1	HOISTING
4	MAGNET CONTACTOR	DMC22C	1	MAIN MAG.
5	MAGNET CONTACTOR	DMC22C	2	HOISTING
6	MAGNET CONTACTOR	DMC22C	2	CREEP HOIST
7	SILICON RECTIFIER	SR–30	1	HOISTING
8	SILICON RECTIFIER	SR–30	1	CREEP HOIST
9	E.O.C.R	SS–30	1	HOISTING
10	E.O.C.R	SS–05	1	CREEP HOIST
11	FUSE	1 A	2	
12	FUSE	3 A	1	
13	TRANSFORMER	220V/110V(120V), 60VA	1	
14	UPPER LIMITER	AC 600V, 75A	1	LS–1,2
15	TERMINAL BLOCK	60A,15A		
16	EARTH TERMINAL	3tx20x50	1	

NOTE

1. UPPER LIMIT LS–1,LS–2의 접점 허용 전류 용량 : AC 600V, 75A
2. POWER SOURCE : AC, 3φ 480V 60HZ
3. EARTH TERMINAL RESISTANCE : 0.018Ω

NOTE

1. 전선의 색상은 다음과 같다.
   1) 흑색 : 교류 및 직류 전원선로
   2) 적색 : 교류제어선
   3) 주황색 : 외부 전원에서 공급되는 연동장치 제어회로
   4) 녹색 또는 녹색과 황색 혼용 : 접지선
   5) 청색 : 직류 제어선로
2. CABLE MATERIAL : KIV OR EQUIVALENT, MIN SIZE : 2.5sq
3. 제어용 전선 : 2.5mm KIV,HIV
4. 제작시 다소 변경 될수있음.
5. 외함 개방구조는 다음과 같을것.
   1) 외함 개방시 충전부분이 차단되도록 할것.
   2) 외함 개방후 충전되어있는 부분은 IP2X 이상의 직접 접촉 방호가 되어있을것.

MK	DATE	REVISIONS	CHK.	APP.
4				
3				
2				
1				

CUSTOMER		DRAWING	DESIGN	CHECKED	APPROVED	SCALE	DATE	ORDER NO.
DRAWING TITLE	CREEP HOIST CONTROL BOX					NONE		
	ARRANGEMENT DRAWING	극동호이스트 주식회사 KUK DONG HOIST CO., LTD.				DWG. NO	KDC2BA61	

192.168.11.76 / 2014-04-19 09:50:43
KOREA OCCUPATIONAL SAFETY & HEALTH AGENCY
본 도면은 산업안전보건공단 승인 필

1	2	3	4	5	6	7	8	9	10	11	12	13	14	15	16	17	18	19	20.

ADR'S NO.

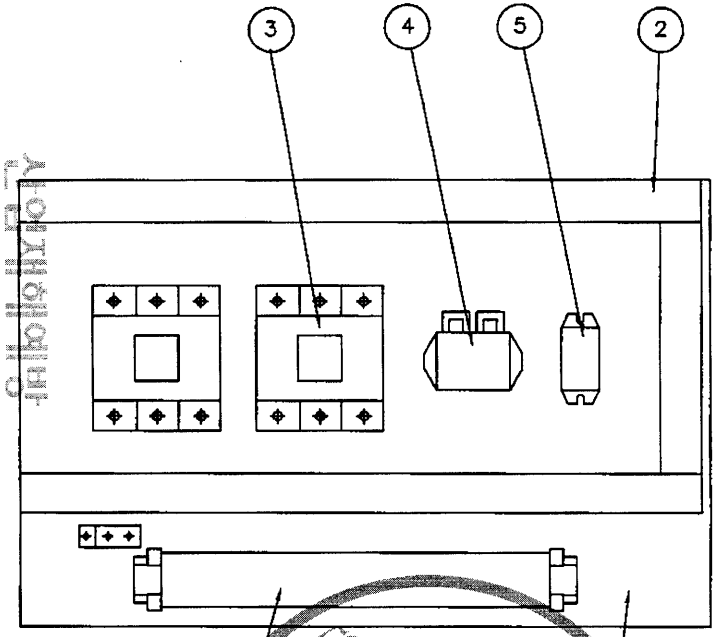

NO	DESCRIPTION	SPEC	Q'TY	REMARK
1	CHASSIS PLATE	–	1	아 연 도 금
2	CABLE DUCT	–	1	
3	MAGNET CONTACTOR	DMC22C	2	TRAVERSING
4	E.O.C.R	SS–05	1	TRAVERSING
5	SILICON RECTIFIER	SR–30	1	TRAVERSING
6	TERMINAL BLOCK	25A , 15A	1	TRAVERSING

NOTE 1. 전선의 색상은 다음과 같다.
1) 흑색 : 교류 및 직류 전원선로
2) 적색 : 교류제어선
3) 주황색 : 외부 전원에서 공급되는 연동장치 제어회로
4) 녹색 또는 녹색과 황색 혼용 : 접지선
5) 청색 : 직류 제어선로

2. CABLE MATERIAL : KIV OR EQUIVALENT
MIN SIZE : 2.5sq
3. 제어용 전선 : 2.5mm KIV,HIV
4. 제작시 다소 변경 될수있음.
5. 외함 개방구조는 다음과 같을것.
1) 외함 개방시 충전부분이 차단되도록 할것.
2) 외함 개방후 충전되어있는 부분은 IP2X 이상의 직접 접촉 방호가 되어있을것.

MK	DATE	REVISIONS	CHK.	APP.

CUSTOMER	
DRAWING TITLE	TRAVERSING POWER CONTROL BOX
	ARRANGEMENT DRAWING

DRAWING	DESIGN	CHECKED	APPROVED	SCALE	DATE	ORDER NO.
				NONE		

극동호이스트 주식회사
KUK DONG HOIST CO., LTD.

DWG. NO KDC2bt62

불법복제 및 배포금지
아산보건관리단
KOREA OCCUPATIONAL SAFETY & HEALTH AGENCY
192.168.11.76 / 2014-04-19 09:50:43

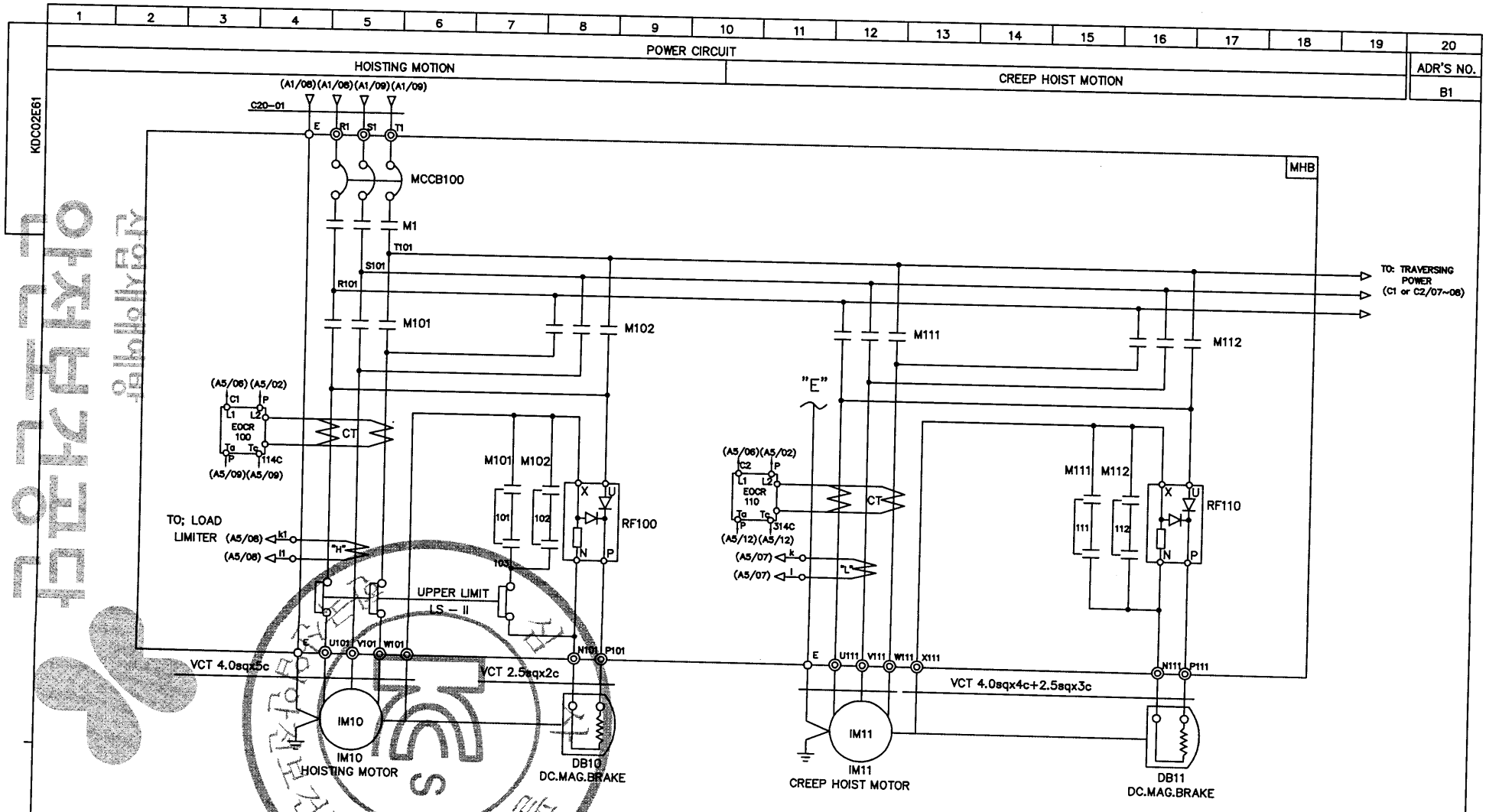

SPECIFICATION / SYMBOLS / DESCRIPTION	HOISTING POWER	HOISTING MOTOR	CREEP MOTOR	DC.MAG BRAKE	NO FUSE BREAKER	TRANSFORMER	FUSE		MAIN MAGNET	MAGNET CONTACTOR		UPPER LIMIT	ELECTRIC OVER CURRENT RELAY		SILICON RECTIFIER		LOAD LIMITER	CABLE
DESCRIPTION	HOIST	IM 10	IM 11	DB10, 11	MCCB100	TR 1	F11,F12	F13	M1	M101,M102	M111,M112	LS-I, LS-II	SS-30	EOCR110	RF100	RF110	LOAD LIMITER	C20-01
SELECTION	2TON AC 3PH 480V 60Hz	3.7KWx4P	0.4KWx4P	DC 100V	ABE-33AF/15A	480/110V,120V,60VA	1A	3A	DMC22C	DMC22C	DMC22C	AC 600V 75A	SS-30	SS-05	SR-30	SR-30	JDL-100	VFCT 4sqx4c
MAKER	KUKDONG				LS	SHINHAN	–		DONG-A			KUKDONG	ASECO				JUNGHO	DONGIL

MK	DATE	REVISIONS	CHK.	APP.
4				
3				
2				
1				

CUSTOMER		DRAWING	DESIGN	CHECKED	APPROVED	SCALE	DATE	ORDER NO.
DRAWING TITLE	CREEP HOISTING POWER CONTROL CIRCUIT DIAGRAM(FOR MONORAIL HOIST)					NONE		

국동호이스트 주식회사
KUK DONG HOIST CO., LTD.

DWG. NO KDC02E61

산업안전보건연구원
KOREA OCCUPATIONAL SAFETY & HEALTH AGENCY
192.168.11.76 / 2014-04-19 09:50:43
산업재해예방
산업안전보건연구원
불법복제 및 배포금지

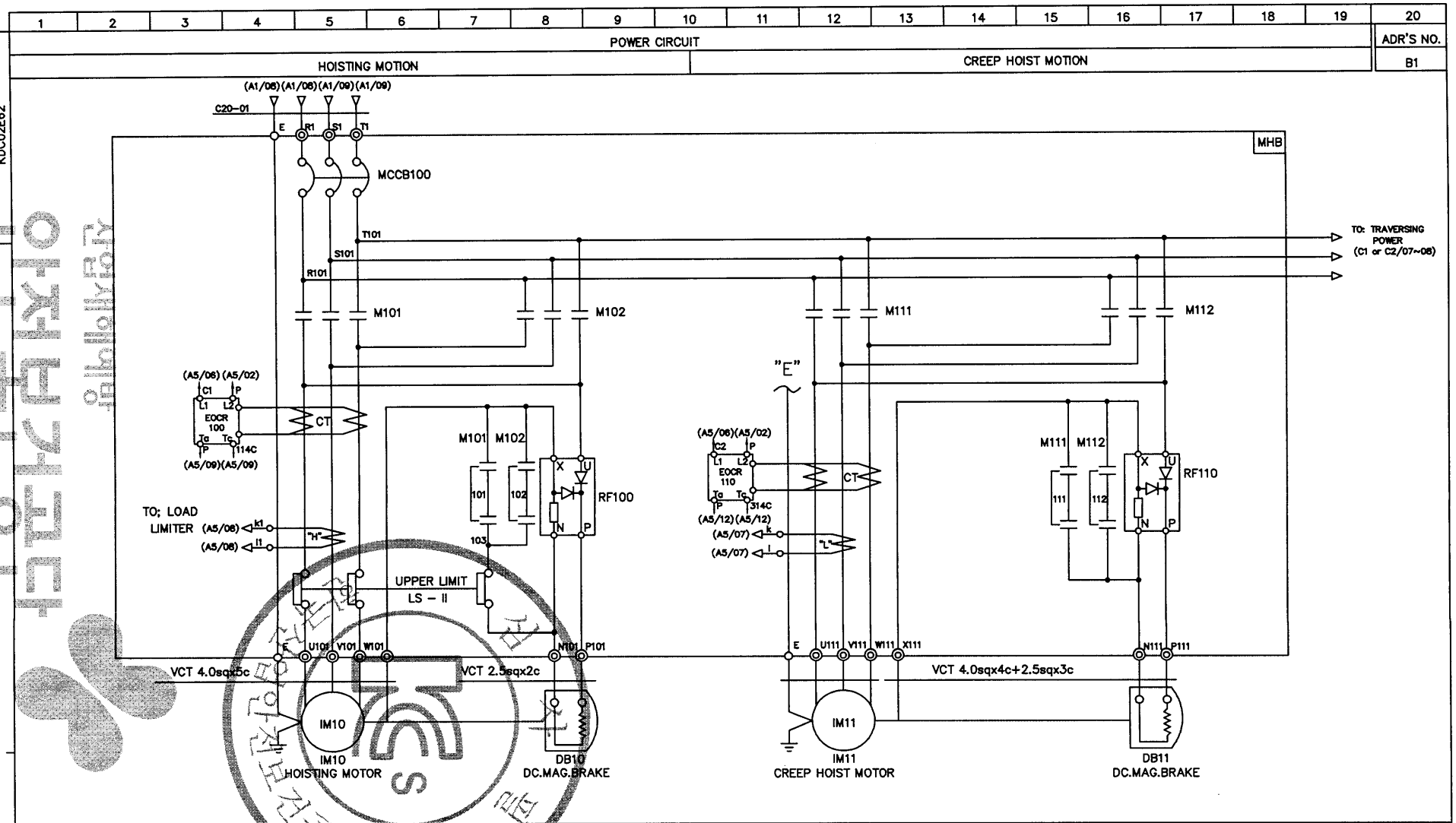

SPECIFICATION / SYMBOLS / DESCRIPTION	HOISTING POWER	HOISTING MOTOR	CREEP MOTOR	DC.MAG BRAKE	NO FUSE BREAKER	TRANSFORMER	FUSE		MAGNET CONTACTOR		UPPER LIMIT	ELECTRIC OVER CURRENT RELAY		SILICON RECTIFIER		LOAD LIMITER	CABLE
	HOIST	IM 10	IM 11	DB10, 11	MCCB100	TR 1	F11,F12	F13	M101,M102	M111,M112	LS-I, LS-II	EOCR100	EOCR110	RF100	RF110	LOAD LIMITER	C20-01
	2TON AC 3PH 480V 60Hz	3.7KW x 4P	0.4KWx4P	DC 100V	ABE-33AF/15A	480/110V,120V,60VA	1A	3A	DMC22C	DMC22C	AC 600V 75A	SS-30	SS-05	SR-30	SR-30	JDL-100	VFCT 4sqx4c
SELECTION / MAKER	KUKDONG				LS	SHINHAN	-		DONG-A		KUKDONG	ASECO				JUNGHO	DONGIL

MK	DATE	REVISIONS	CHK.	APP.
4				
3				
2				
1				

CUSTOMER		DRAWING	DESIGN	CHECKED	APPROVED	SCALE	DATE	ORDER NO.
DRAWING TITLE	CREEP HOISTING POWER CONTROL CIRCUIT DIAGRAM(FOR CRANE)					NONE		
		극동호이스트 주식회사 KUK DONG HOIST CO., LTD.				DWG. NO	KDC02E62	

KOREA OCCUPATIONAL SAFETY & HEALTH AGENCY
192.168.11.76 / 2014-04-19 09:50:43
불법복제 및 배포금지

1	2	3	4	5	6	7	8	9	10	11	12	13	14	15	16	17	18	19	20

POWER CIRCUIT

TRAVERSING MOTION

ADR'S NO. C1

KDC02E63

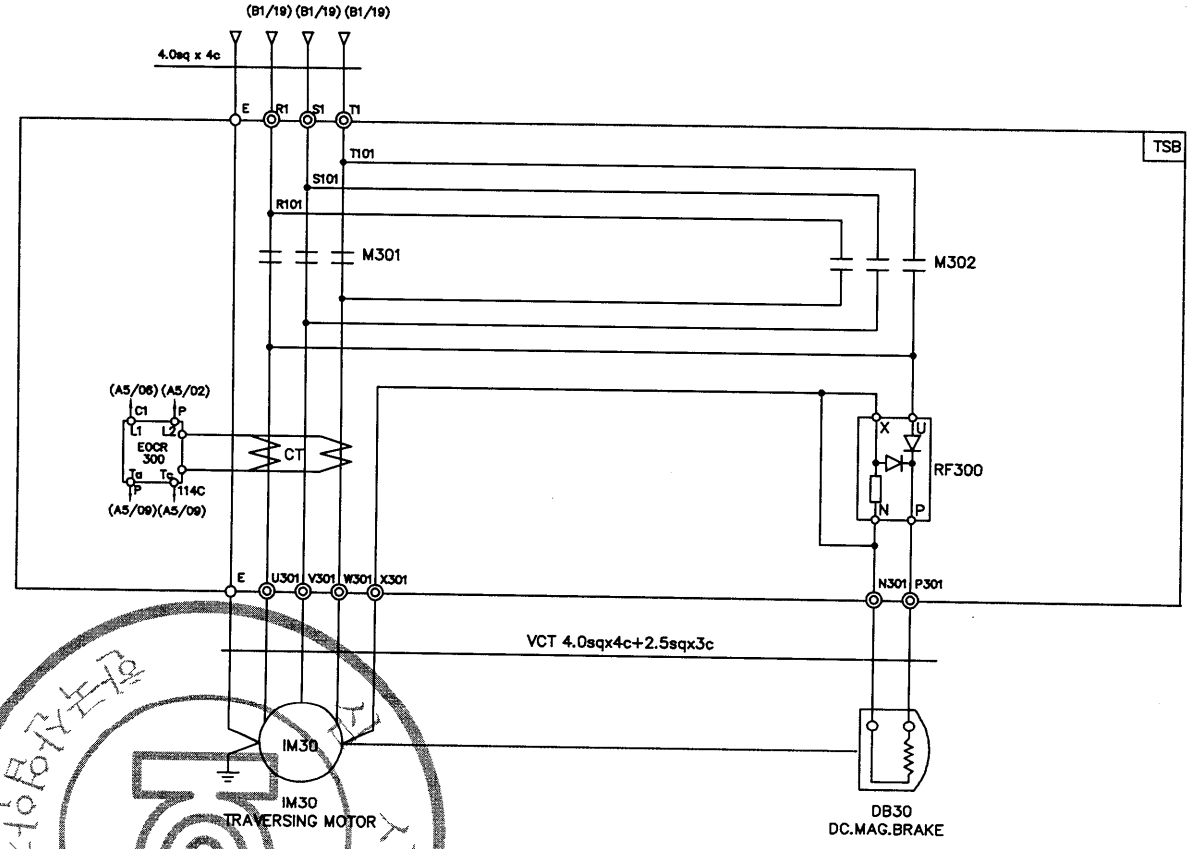

SPECIFICATION / SYMBOLS		TRAVERSING MOTOR	DC MAG' BRAKE	MAGNET CONTACTOR	SILICON RECTIFIER	ELECTRIC OVER CURRENT RELAY	LIMIT SWTCH
DESCRIPTION		IM 30	DB 30	M301 , M302	RF 300	EOCR 300	LS-301 , LS-302
	480V	0.75KW x 4P AC 3PH 480V 60Hz	DC 100V	DMC22C	SR-30 AC 220V/DC 100V	SS-05	HY - W904
		0.5KW x 6P AC 3PH 480V 60Hz	DC 100V	DMC22C	SR-30 AC 220V/DC 100V	SS-05	HY - W904
SELECTION / MAKER		KUKDONG		DONG-A	ASECO		

MK	DATE	REVISIONS	CHK.	APP.
4				
3				
2				
1				

CUSTOMER		DRAWING	DESIGN	CHECKED	APPROVED	SCALE	DATE	ORDER NO.
DRAWING TITLE	TRAVERSING POWER CONTROL CIRCUIT DIAGRAM					NONE		
		극동호이스트 주식회사 KUK DONG HOIST CO., LTD.				DWG. NO	KDC02E63	

산업재해예방
한국산업안전보건공단
KOREA OCCUPATIONAL SAFETY & HEALTH AGENCY
192.168.11.76 / 2014-04-19 09:50:43
불법복제 및 배포금지

1	2	3	4	5	6	7	8	9	10	11	12	13	14	15	16	17	18	19	20

POWER CIRCUIT — ADR'S NO.

TRAVERSING MOTION — C2

KDC02E64

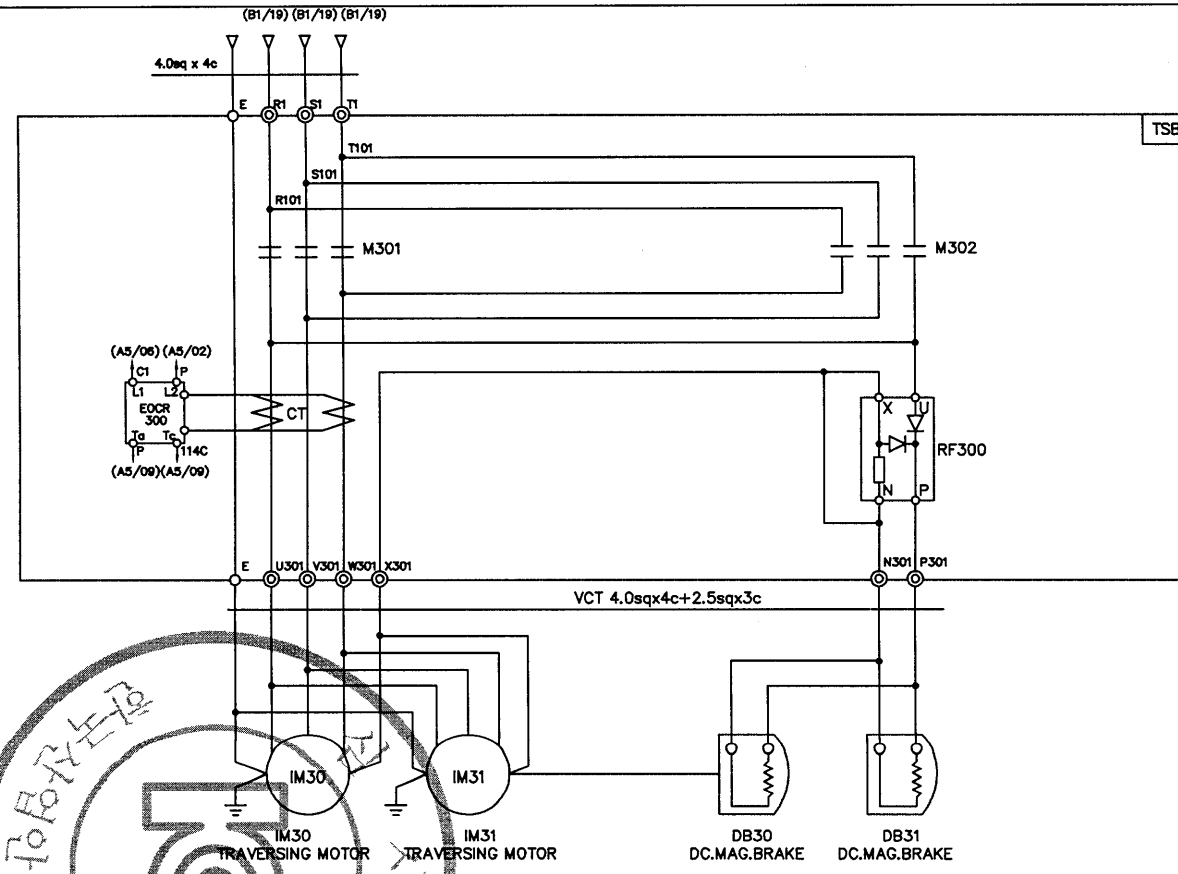

SPECIFICATION / SYMBOLS		TRAVERSING MOTOR	DC MAG' BRAKE	MAGNET CONTACTOR	SILICON RECTIFIER	ELECTRIC OVER CURRENT RELAY	LIMIT SWTCH
DESCRIPTION		IM 30 , 1M31	DB 30	M301 , M302	RF 300	EOCR 300	LS-301 , LS-302
	480V	0.75KW x 4P AC 3PH 480V 60Hz	DC 100V	DMC22C	SR-30 AC 220V/DC 100V	SS-05	HY - W904
		0.5KW x 6P AC 3PH 480V 60Hz	DC 100V	DMC22C	SR-30 AC 220V/DC 100V	SS-05	HY - W904
SELECTION / MAKER		KUKDONG		DONG-A	ASECO		

MK	DATE	REVISIONS	CHK.	APP.
4				
3				
2				
1				

CUSTOMER		DRAWING	DESIGN	CHECKED	APPROVED	SCALE	DATE	ORDER NO.
DRAWING TITLE	TRAVERSING POWER CONTROL CIRCUIT					NONE		
	DIAGRAM	극동호이스트 주식회사 KUK DONG HOIST CO., LTD.				DWG. NO	KDC02E64	

한국산업안전보건공단
KOREA OCCUPATIONAL SAFETY & HEALTH AGENCY
192.168.11.76 / 2014-04-19 09:50:43
불법복제 및 배포금지

1	2	3	4	5	6	7	8	9	10	11	12	13	14	15	16	17	18	19	20
POWER CIRCUIT																			ADR'S NO.
TRAVERSING MOTION																			C1

KDC02E065

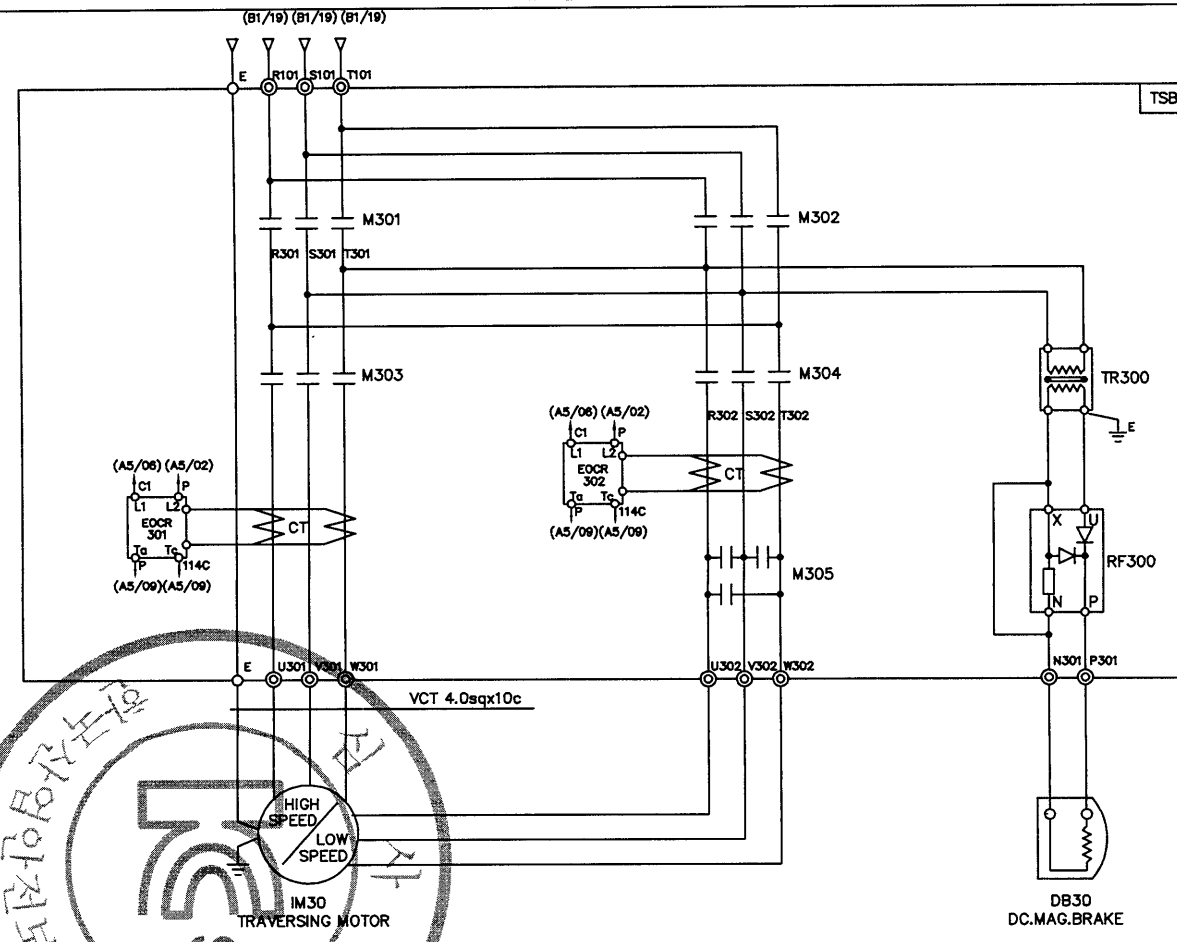

SPECIFICATION / SYMBOLS		TRAVERSING MOTOR	DC MAG' BRAKE	MAGNET CONTACTOR		SILICON RECTIFIER	ELECTRIC OVER CURRENT RELAY	TRANSFORMER
DESCRIPTION		IM 30	DB30	M301 , M302 , M303	M304 , M305	RF 300	EOCR 301,302	TR300
	480V	0.5/0.25KWx6/12P AC 3PH 480V 60Hz	DC 100V	DMC22C	DMC22C	SR-30	SS-05	AC480/220V, 300VA
	480V	0.8/0.4KWx4/8P AC 3PH 480V 60Hz	DC 100V	DMC22C	DMC22C	SR-30	SS-05	AC480/220V, 300VA
SELECTION MAKER		KUKDONG		DONG-A		ASECO		SHINHAN

MK	DATE	REVISIONS	CHK.	APP.	CUSTOMER		DRAWING	DESIGN	CHECKED	APPROVED	SCALE	DATE	ORDER NO.
					DRAWING TITLE	TRAVERSING POWER CONTROL CIRCUIT					NONE		
						DIAGRAM	국동호이스트 주식회사 KUK DONG HOIST CO., LTD.				DWG. NO	KDC02E65	

산업재해예방
안전보건공단
KOREA OCCUPATIONAL SAFETY & HEALTH AGENCY
192.168.11.76 / 2014-04-19 09:50:43

불법복제 및 배포금지

KDC02E066

POWER CIRCUIT

TRAVERSING MOTION

ADR'S NO. C2

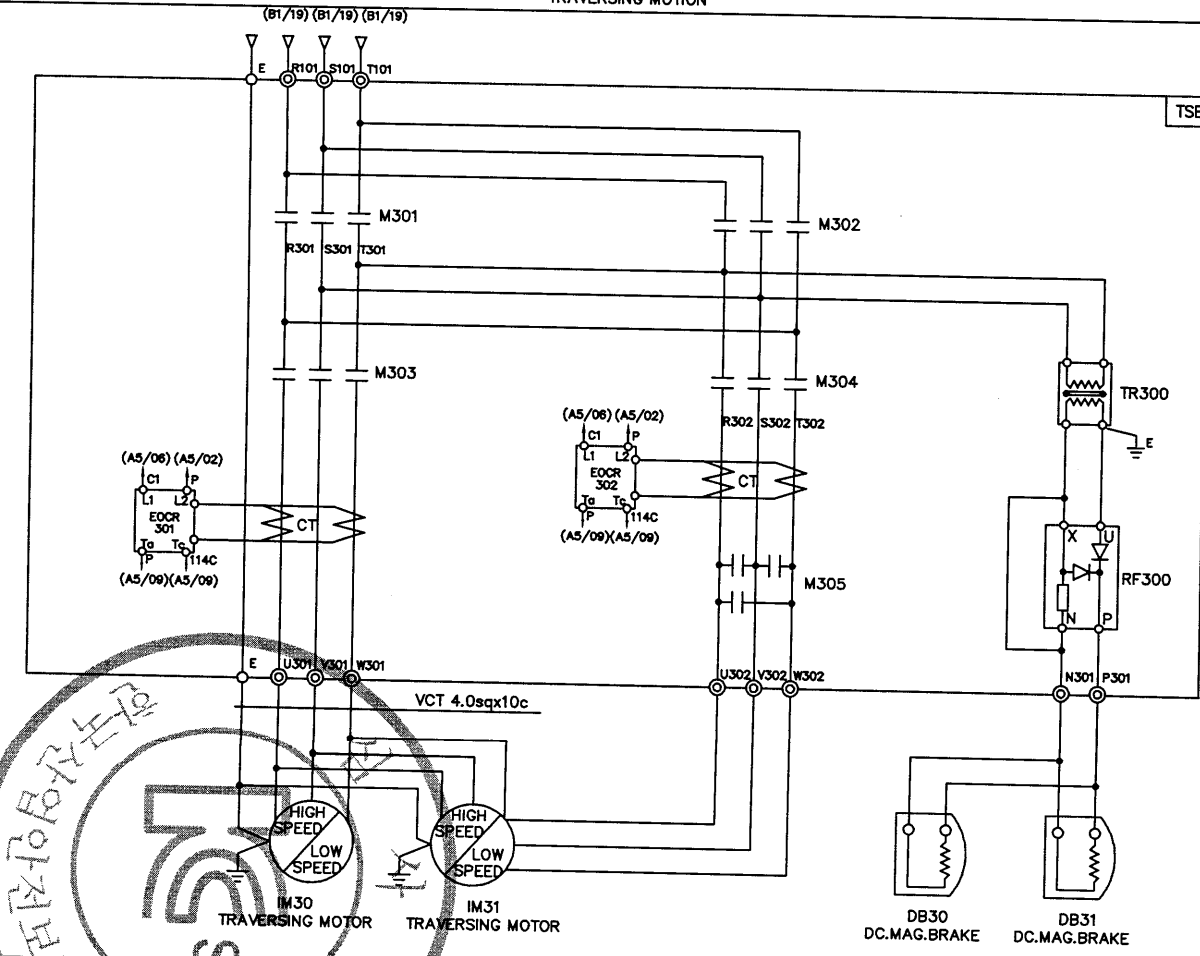

SPECIFICATION / SYMBOLS / DESCRIPTION		TRAVERSING MOTOR	DC MAG' BRAKE	MAGNET CONTACTOR		SILICON RECTIFIER	ELECTRIC OVER CURRENT RELAY	TRANSFORMER
		IM 30 , 1M31	DB30 , DB31	M301 , M302 , M303	M304 , M305	RF 300	EOCR 301,302	TR300
	480V	0.5/0.25KWx6/12P AC 3PH 480V 60Hz	DC 100V	DMC22C	DMC22C	SR-30	SS-05	AC480/220V, 300VA
	480V	0.8/0.4KWx4/8P AC 3PH 480V 60Hz	DC 100V	DMC22C	DMC22C	SR-30	SS-05	AC480/220V, 300VA
SELECTION MAKER		KUKDONG		DONG-A		ASECO		SHINHAN

MK	DATE	REVISIONS	CHK.	APP.
4				
3				
2				
1				

CUSTOMER		DRAWING	DESIGN	CHECKED	APPROVED	SCALE	DATE	ORDER NO.
DRAWING TITLE	TRAVERSING POWER CONTROL CIRCUIT DIAGRAM					NONE		
		국동호이스트 주식회사 KUK DONG HOIST CO., LTD.				DWG. NO	KDC02E66	

산업재해예방 안전보건공단
KOREA OCCUPATIONAL SAFETY & HEALTH AGENCY
192.168.11.76 / 2014-04-19 09:50:43
무단배포 및 복제금지

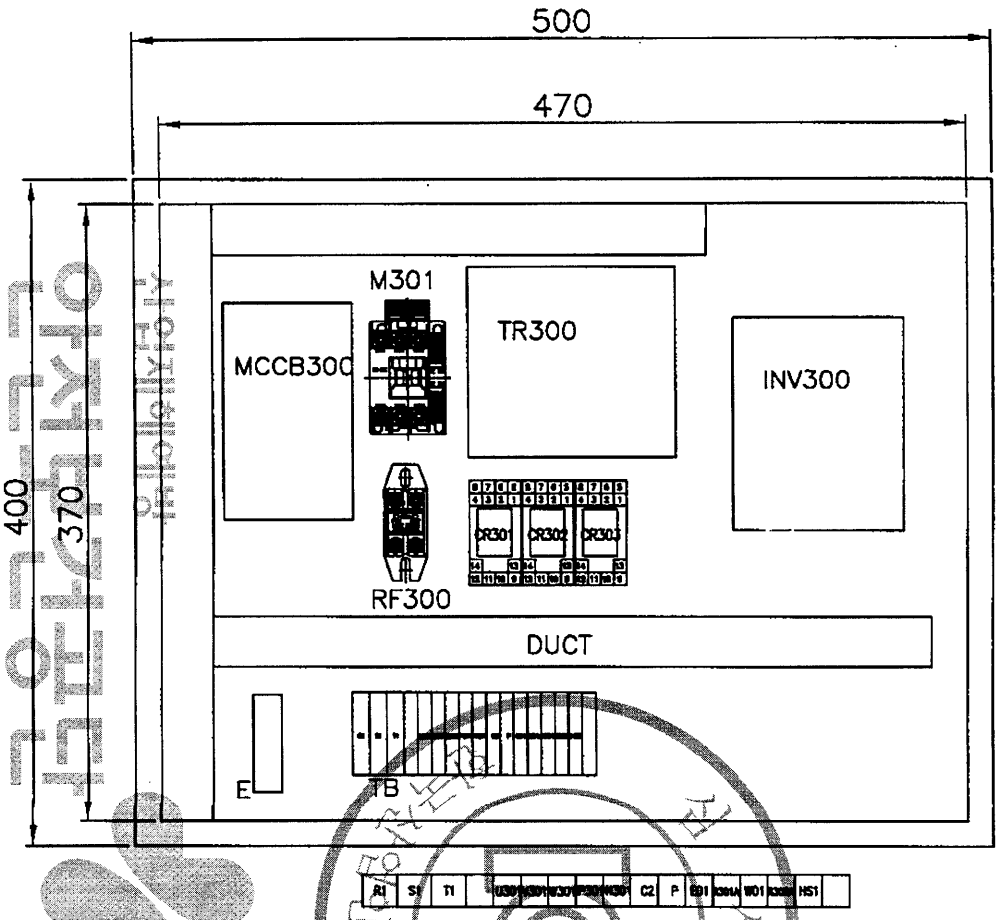

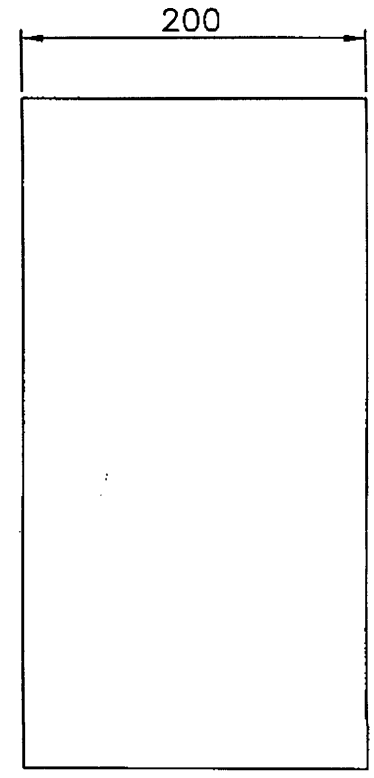

NO.	DESCRIPTION	MT'L	SUB QT'Y	TOTAL QT'Y	SUB WEIGHT(Kg)	TOTAL WEIGHT(Kg)	REMARKS.
2	속 판	SS400		1			
1	T/S BOX	PUR		1			
11	EARTH BUS BAR	PUR		1			
10	DUCT	PUR		1			
9	TERMINAL BLOCK	PUR		1			
8	INVERTER	PUR		1			
7	TR	PUR		1			
6	RELAY & SCOKET	PUR		1			
5	RF	PUR		1			
4	MC	PUR		1			
3	MCCB	PUR		1			

PROJECT				DATE	DIM
					mm
TITLE	T/S CONTROL PANEL(INVERTER)			SCALE	PROJECTION
				A3/3	3rd
DRAWN	DESIGNED	CHECKED	APPROVED	REF. DRAWING	

국동호이스트 주식회사
KUK DONG HOIST CO., LTD.

SHEET No.

DWG No. KD02E1001

불법복제 및 배포금지
KOREA OCCUPATIONAL SAFETY & HEALTH AGENCY
192.168.11.76 / 2014-04-19 09:50:43

1	2	3	4	5	6	7	8	9	10	11	12	13	14	15	16	17	18	19	20
TRAVERSING MOTION																			ADR'S NO.
POWER CIRCUIT DIAGRAM									CONTROL CIRCUIT DIAGRAM										
												BRAKE	EAST		WEST	HIGH SPEED			

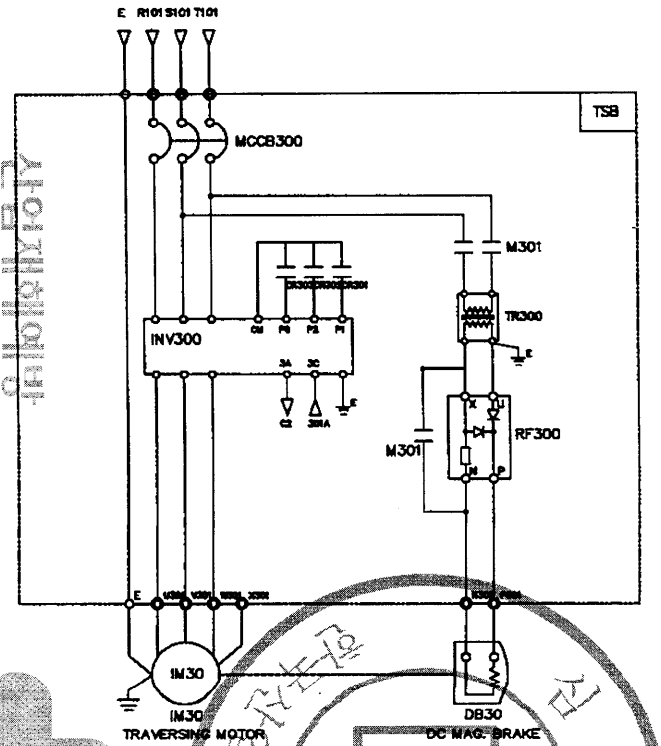

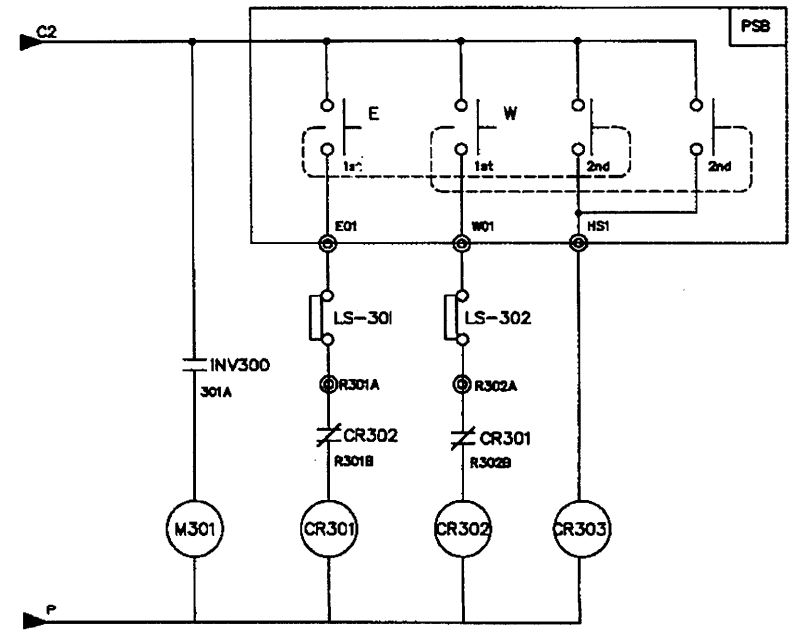

SPECIFICATION / SYMBOLS / DESCRIPTION	TRAVERSING POWER	TRAVERSING MOTOR	DC MAG' BRAKE	NO FUSE BREAKER	TRANSFORMER	BRAKE MAGNET	CONTROL RELAY	INVERTER	SILICON RECTIFIER
		IM 30	DB30	MCCB300	TR 300	M301	CR301,302,303	INV300	RF300
	AC 3PH 220V 60Hz	0.5KW x 6P	DC 100V	DBE-33AF/10AT	220/220V,200VA	DM-22C	MINI 4a4b(Coil AC110V)	SV015IG5A-2	SR-30
	AC 3PH 380(440,460,480)V 60Hz	0.5KW x 6P	DC 100V	DBE-33AF/5AT	380(440,460,480)/220V,200VA	DM-22C	MINI 4a4b(Coil AC110V)	SV015IG5A-4	SR-30
SELECTION / MAKER	KUK DONG HOIST							LS	ASAN

MK	DATE	REVISIONS	CHK.	APP.
4				
3				
2				
1				

CUSTOMER	INVERTER CONTROL
DRAWING TITLE	TRAVERSING POWER & CONTROL CIRCUIT DIAGRAM

DRAWING	DESIGN	CHECKED	APPROVED	SCALE	DATE	ORDER NO.

국동호이스트 주식회사
KUK DONG HOIST CO., LTD.

DWG. NO KD02EI002

192.168.11.76 / 2014-04-19 09:50:43
한국산업안전보건공단
KOREA OCCUPATIONAL SAFETY & HEALTH AGENCY
이 문서는 한국산업안전보건공단 전자문서 인증서를 통해 배포된 문서입니다.

1	2	3	4	5	6	7	8	9	10	11	12	13	14	15	16	17	18	19	20
TRAVERSING MOTION																			ADR'S NO.
POWER CIRCUIT DIAGRAM										CONTROL CIRCUIT DIAGRAM									
													BRAKE	EAST	WEST	HIGH SPEED			

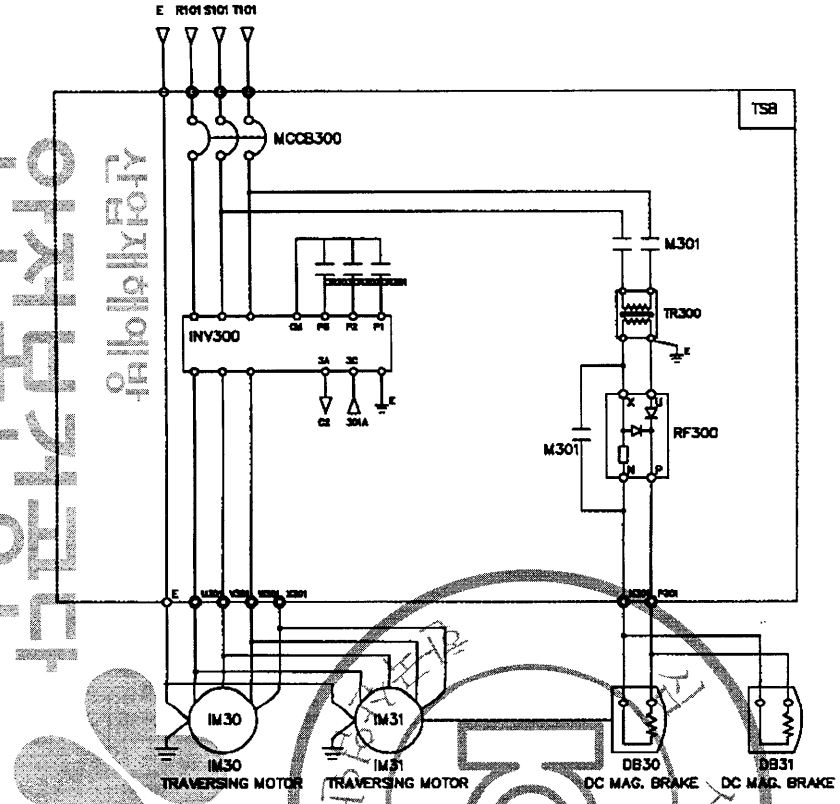

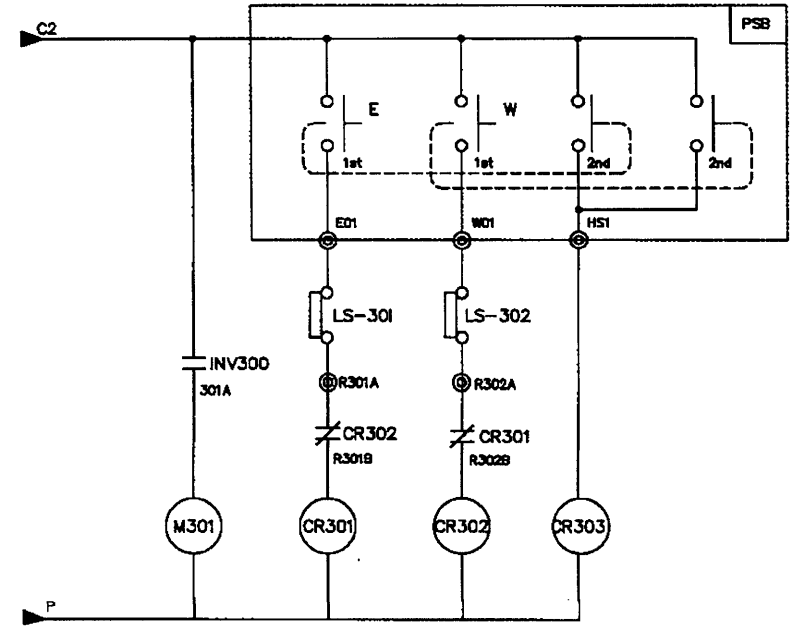

SPECIFICATION / SYMBOLS / DESCRIPTION	TRAVERSING POWER	TRAVERSING MOTOR	DC.MAG' BRAKE	NO FUSE BREAKER	TRANSFORMER	BRAKE MAGNET	CONTROL RELAY	INVERTER	SILICON RECTIFIER	
		IM 30,31	DB30,31	MCCB300	TR 300	M301	CR301,302,303	INV300	RF300	
	AC 3PH 220V 60Hz	0.5KW x 6P	DC 100V	DBE-33AF/15AT	220/220V,300VA	DM-22C	MINI 4a4b(Coil AC110V)	SV022IG5A-2	SR-30	
	AC 3PH 380(440,460,480)V 60Hz	0.5KW x 6P	DC 100V	DBE-33AF/10AT	380(440,460,480)/220V,300VA	DM-22C	MINI 4a4b(Coil AC110V)	SV022IG5A-4	SR-30	
SELECTION MAKER	KUK DONG HOIST							LS	ASAN	

MK	DATE	REVISIONS	CHK.	APP.

CUSTOMER	INVERTER CONTROL	DRAWING	DESIGN	CHECKED	APPROVED	SCALE	DATE	ORDER NO.
DRAWING TITLE	TRAVERSING POWER & CONTROL CIRCUIT DIAGRAM							
		국동호이스트 주식회사 KUK DONG HOIST CO., LTD.				DWG. NO	KD02EI003	

192.168.11.76 / 2014-04-19 09:50:43
KOREA OCCUPATIONAL SAFETY & HEALTH AGENCY
산업재해예방 안전보건공단
산업안전보건연구원
산업재해예방 안전보건공단
KCS

1	2	3	4	5	6	7	8	9	10	11	12	13	14	15	16	17	18	19	20

TRAVERSING MOTION

ADR'S NO.

POWER CIRCUIT DIAGRAM

CONTROL CIRCUIT DIAGRAM

BRAKE	EAST	WEST	HIGH SPEED

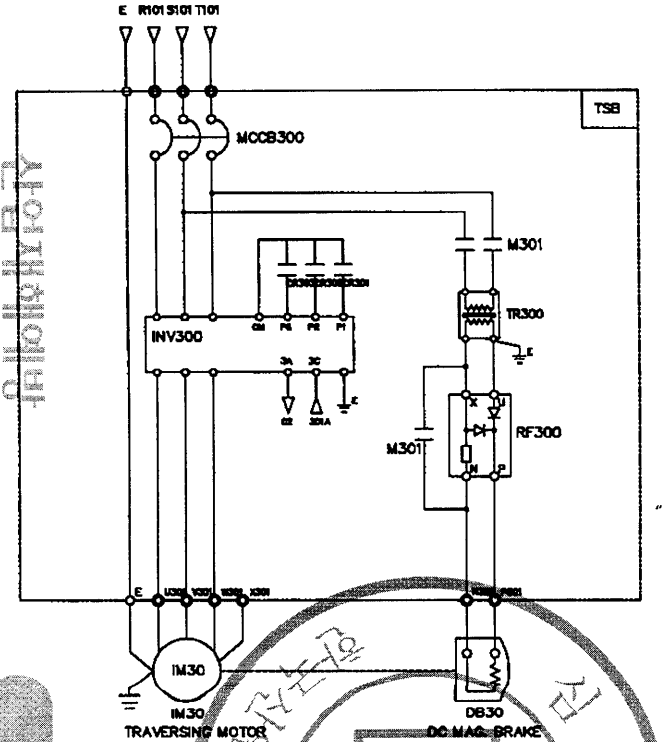

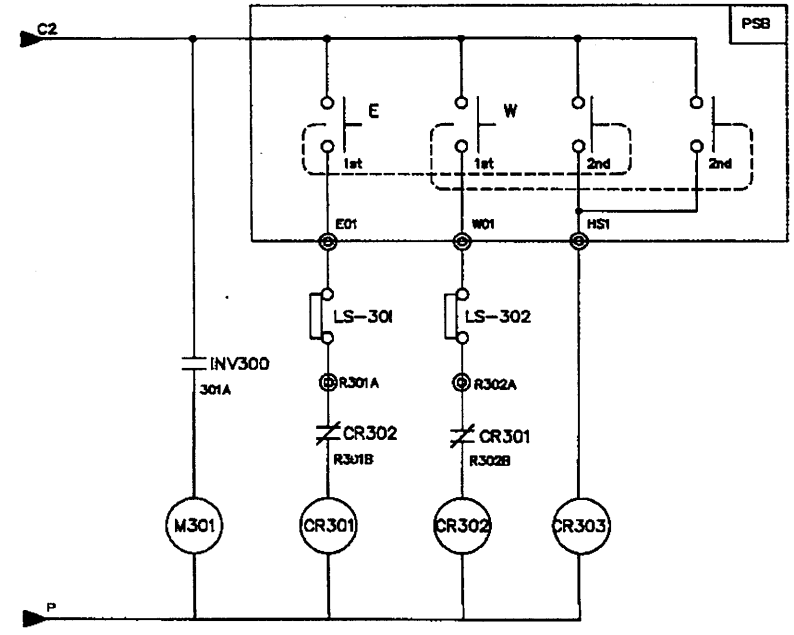

SPECIFICATION / SYMBOLS / DESCRIPTION	TRAVERSING POWER	TRAVERSING MOTOR	DC MAG' BRAKE	NO FUSE BREAKER	TRANSFORMER	BRAKE MAGNET	CONTROL RELAY	INVERTER	SILICON RECTIFIER
		IM 30	DB30	MCCB300	TR 300	M301	CR301,302,303	INV300	RF300
	AC 3PH 220V 60Hz	0.75KW x 4P	DC 100V	DBE-33AF/10AT	220/220V,200VA	DM-22C	MINI 4a4b(Coil AC110V)	SV015IG5A-2	SR-30
	AC 3PH 380(440,460,480)V 60Hz	0.75KW x 4P	DC 100V	DBE-33AF/5AT	380(440,460,480)/220V,200VA	DM-22C	MINI 4a4b(Coil AC110V)	SV015IG5A-4	SR-30
SELECTION MAKER	KUK DONG HOIST							LS	ASAN

MK	DATE	REVISIONS	CHK.	APP.
4				
3				
2				
1				

CUSTOMER	INVERTER CONTROL
DRAWING TITLE	TRAVERSING POWER & CONTROL CIRCUIT DIAGRAM

DRAWING	DESIGN	CHECKED	APPROVED	SCALE	DATE	ORDER NO.

국동호이스트 주식회사
KUK DONG HOIST CO., LTD.

DWG. NO KD02EI004

192.168.11.76 / 2014-04-19 09:50:43
아주대학교 산업안전보건센터
KOREA OCCUPATIONAL SAFETY & HEALTH AGENCY
본 사 전산실 배포용

1	2	3	4	5	6	7	8	9	10	11	12	13	14	15	16	17	18	19	20
TRAVERSING MOTION																			ADR'S NO.
POWER CIRCUIT DIAGRAM									CONTROL CIRCUIT DIAGRAM										
												BRAKE	EAST		WEST	HIGH SPEED			

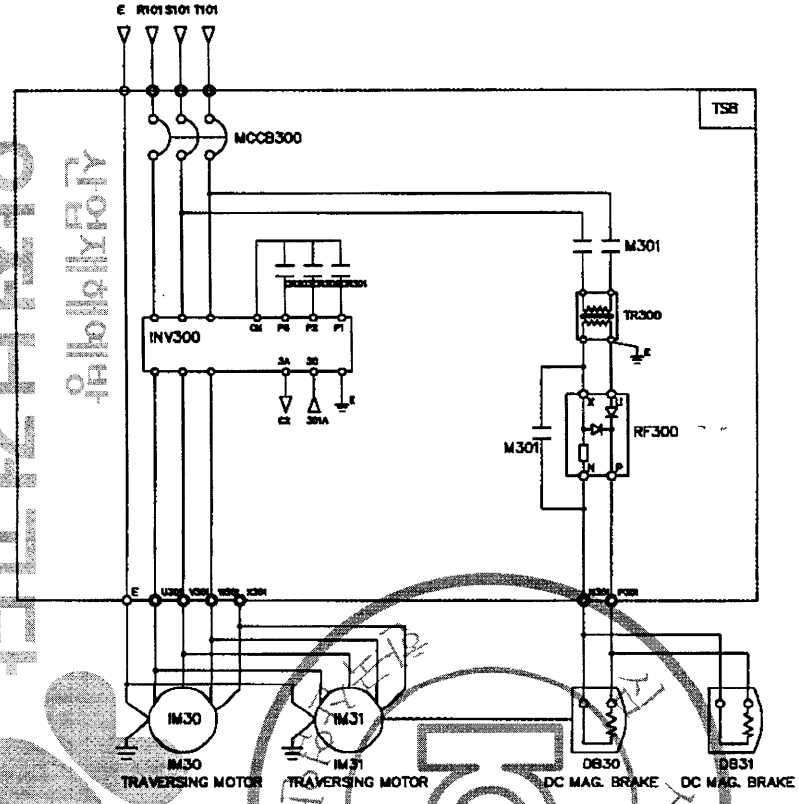

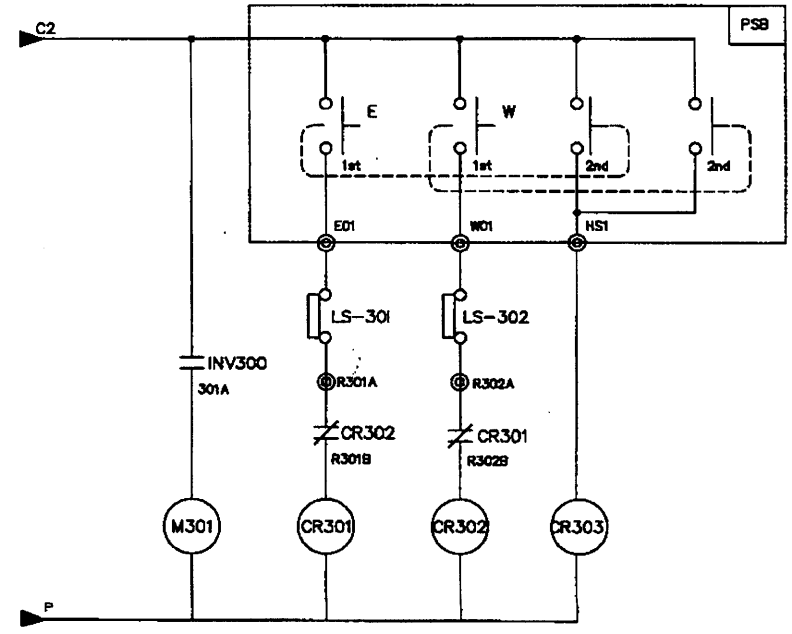

SPECIFICATION / SYMBOLS / DESCRIPTION	TRAVERSING POWER	TRAVERSING MOTOR	DC.MAG' BRAKE	NO FUSE BREAKER	TRANSFORMER	BRAKE MAGNET	CONTROL RELAY	INVERTER	SILICON RECTIFIER	
		IM 30,31	DB30,31	MCCB300	TR 300	M301	CR301,302,303	INV300	RF300	
	AC 3PH 220V 60Hz	0.75KW x 4P	DC 100V	DBE-33AF/15AT	220/220V,300VA	DM-22C	MINI 4a4b(Coil AC110V)	SV037IG5A-2	SR-30	
	AC 3PH 380(440,460,480)V 60Hz	0.75KW x 4P	DC 100V	DBE-33AF/10AT	380(440,460,480)/220V,300VA	DM-22C	MINI 4a4b(Coil AC110V)	SV037IG5A-4	SR-30	
SELECTION / MAKER	KUK DONG HOIST							LS	ASAN	

MK	DATE	REVISIONS	CHK.	APP.
4				
3				
2				
1				

CUSTOMER	INVERTER CONTROL
DRAWING TITLE	TRAVERSING POWER & CONTROL CIRCUIT DIAGRAM

DRAWING	DESIGN	CHECKED	APPROVED	SCALE	DATE	ORDER NO.

극동호이스트 주식회사
KUK DONG HOIST CO., LTD.

DWG. NO KD02EI005

한국산업안전보건공단
KOREA OCCUPATIONAL SAFETY & HEALTH AGENCY
192.168.11.76 / 2014-04-19 09:50:43

1	2	3	4	5	6	7	8	9	10	11	12	13	14	15	16	17	18	19	20.
CONTROL CIRCUIT																			ADR'S NO.
EM. STOP					LOAD LIMIT		UPPER LIMIT		CREEP UP		UP		CREEP DOWN		DOWN		EAST		WEST		A5

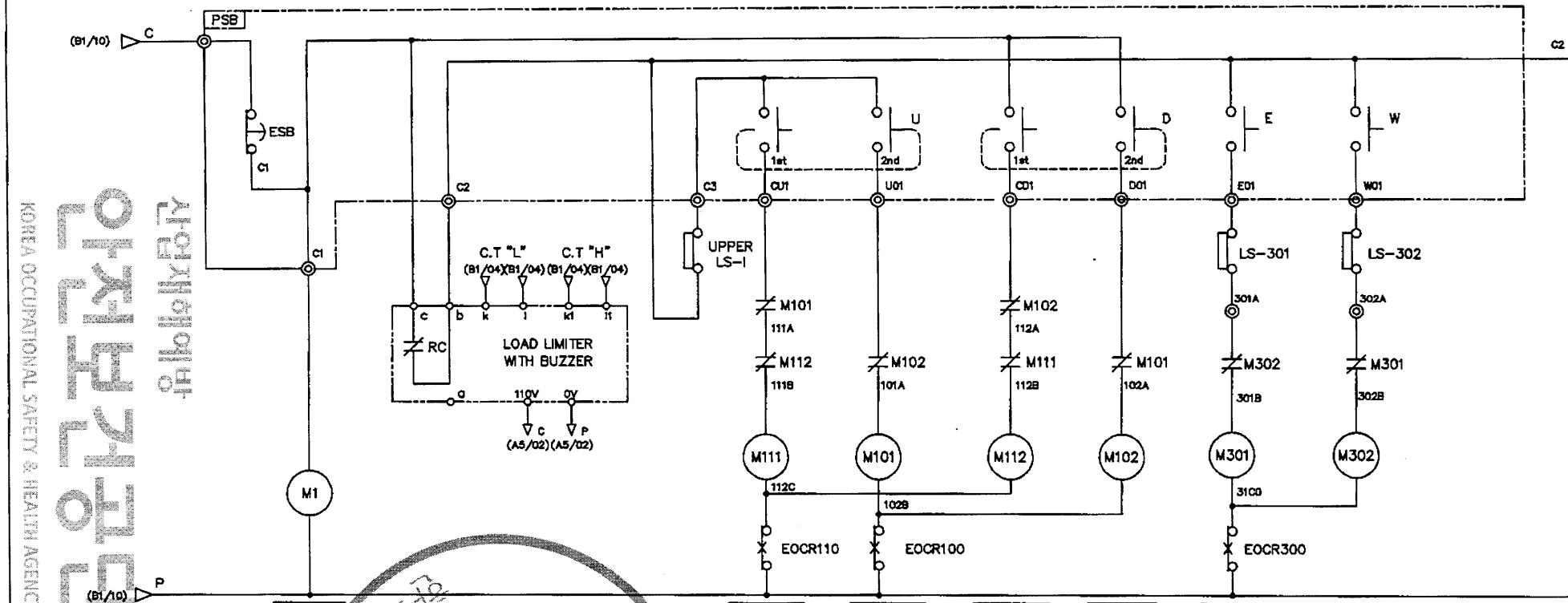

M1	
A	B1/05
A	B1/05
A	B1/05
a	
a	
b	
b	

M111	
A	B1/12
A	B1/12
A	B1/12
a	B1/15
a	B1/15
b	A5/13
b	

M101	
A	B1/05
A	B1/05
A	B1/05
a	B1/07
a	B1/07
b	A5/10
b	A5/14

M112	
A	B1/16
A	B1/16
A	B1/16
a	B1/16
a	B1/16
b	A5/10
b	

M102	
A	B1/08
A	B1/08
A	B1/08
a	B1/08
a	B1/08
b	A5/11
b	A5/13

M301	
A	C1/07
A	C1/07
A	C1/07
a	
a	
b	A5/17
b	

M302	
A	C1/13
A	C1/13
A	C1/13
a	
a	
b	A5/15
b	

SPECIFICATION / SYMBOLS / DESCRIPTION	UPPER LIMIT	PENDANT P.B S/W	LOAD LIMITER	LIMIT SWITCH
	LS-1	E.S.B	LOAD LIMITER	LS-301,302
	AC 600V 75A	250V 3A	JDL-70	HY - W904
	AC 600V 3A	250V 3A	JDL-70	HY - W904
MAKER	KUKDONG	KG-AUTO	JUNGHO	HANYOUNG

MK	DATE	REVISIONS	CHK.	APP.
4				
3				
2				
1				

CUSTOMER		DRAWING	DESIGN	CHECKED	APPROVED	SCALE	DATE	ORDER NO.
DRAWING TITLE	MAIN POWER 2 & CONTROL CIRCUIT DIAGRAM					NONE		
		KD 국동호이스트 주식회사 KUK DONG HOIST CO., LTD.				DWG. NO	KDC2E001	

한국산업안전보건공단 KOREA OCCUPATIONAL SAFETY & HEALTH AGENCY
산업재해예방
RCS 검사필
무단전재 및 배포금지
192.168.11.76 / 2014-04-19 09:50:43

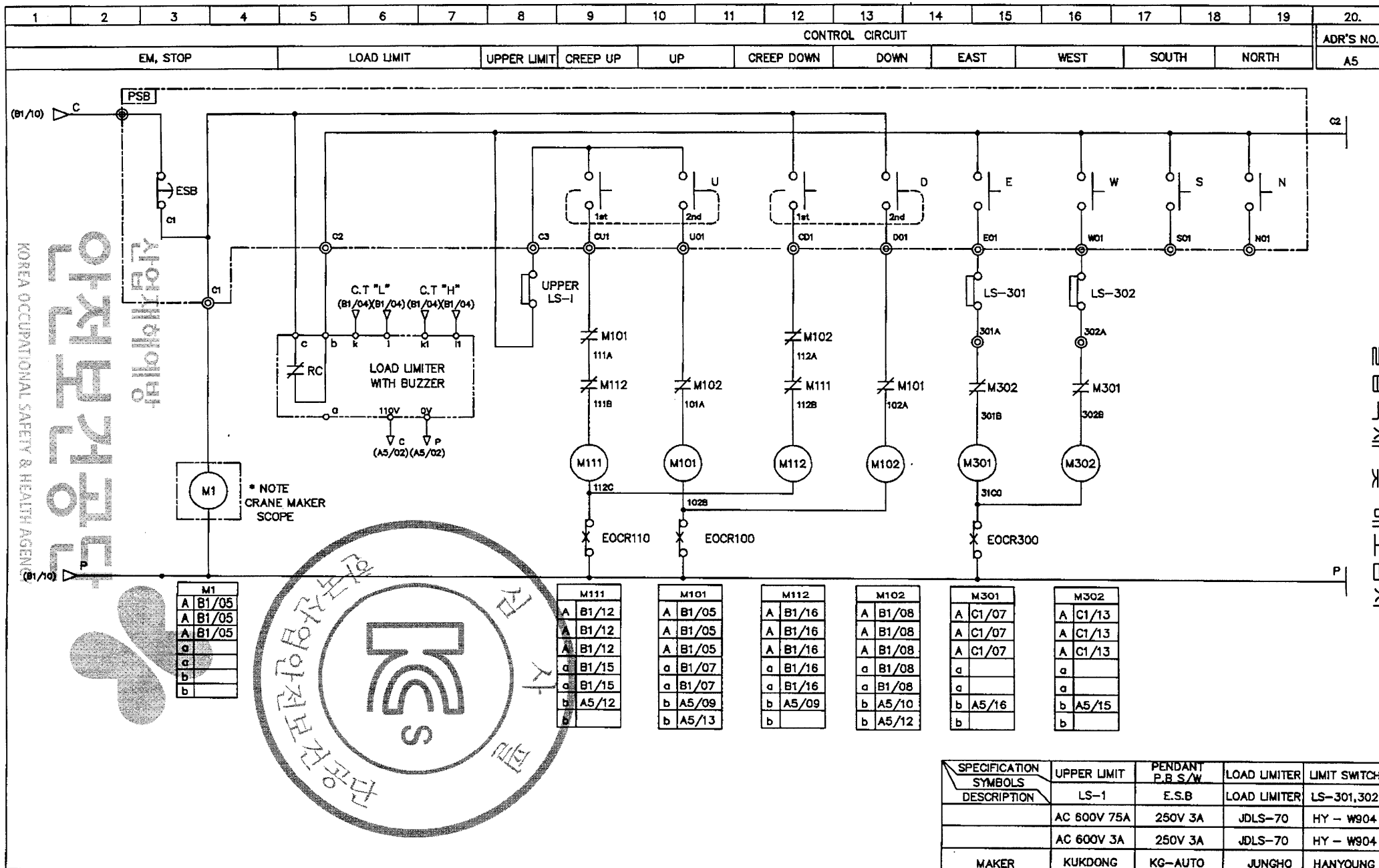

SPECIFICATION / SYMBOLS / DESCRIPTION	UPPER LIMIT	PENDANT P.B S/W	LOAD LIMITER	LIMIT SWITCH
	LS-1	E.S.B	LOAD LIMITER	LS-301,302
	AC 600V 75A	250V 3A	JDLS-70	HY - W904
	AC 600V 3A	250V 3A	JDLS-70	HY - W904
MAKER	KUKDONG	KG-AUTO	JUNGHO	HANYOUNG

MK	DATE	REVISIONS	CHK.	APP.
4				
3				
2				
1				

CUSTOMER		DRAWING	DESIGN	CHECKED	APPROVED	SCALE	DATE	ORDER NO.
DRAWING TITLE	MAIN POWER 2 & CONTROL CIRCUIT					NONE		
	DIAGRAM	KD 국동호이스트 주식회사 KUK DONG HOIST CO., LTD.				DWG. NO	KDC2E002	

192.168.11.76 / 2014-04-19 09:50:43
한국산업안전보건공단 KOREA OCCUPATIONAL SAFETY & HEALTH AGENCY
한국산업안전보건공단 검사필
KCS

1	2	3	4	5	6	7	8	9	10	11	12	13	14	15	16	17	18	19	20.
CONTROL CIRCUIT																			ADR'S NO.
EM.STOP	LOAD LIMIT				CREEP UP		UP		CREEP DOWN	DOWN	EAST-LOW			WEST-LOW		HIGH SPEED			A5

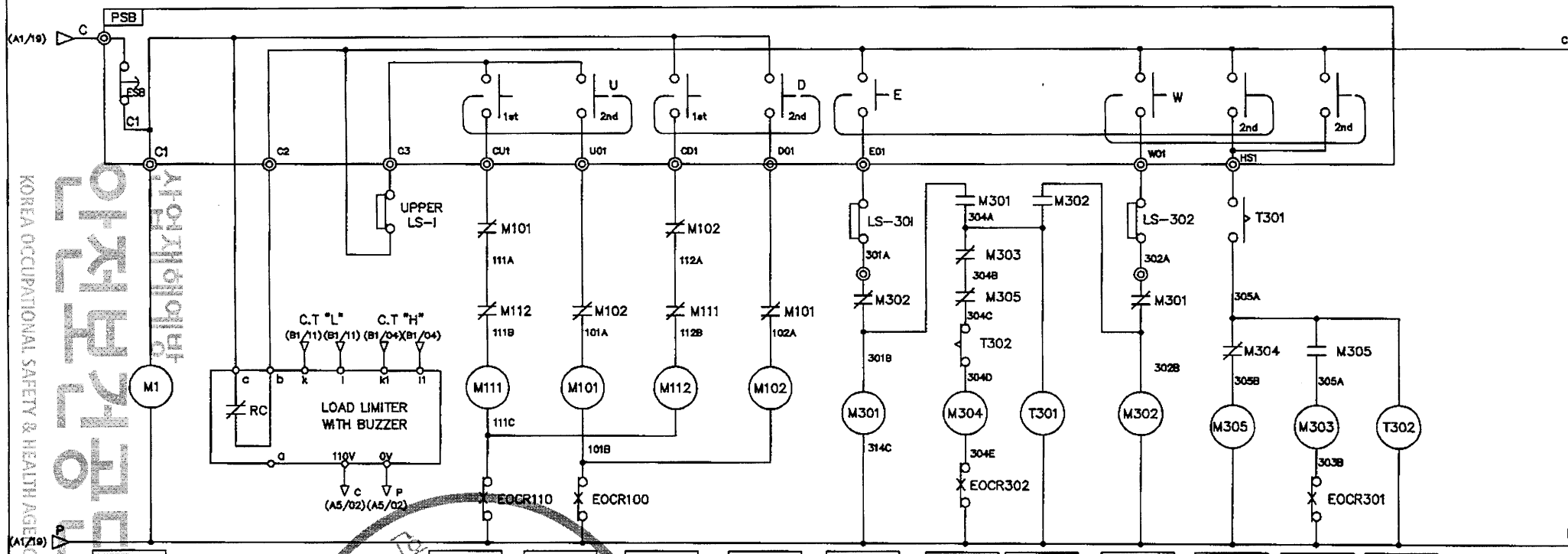

M1	
A	B1/05
A	B1/05
A	B1/05
a	
a	
b	
b	

M111	
A	B1/12
A	B1/12
A	B1/12
a	B1/15
a	B1/15
b	A5/09
b	

M101	
A	B1/05
A	B1/05
A	B1/05
a	B1/07
a	B1/07
b	A5/07
b	A5/10

M112	
A	B1/16
A	B1/16
A	B1/16
a	B1/16
a	B1/16
b	A5/07
b	

M102	
A	B1/08
A	B1/08
A	B1/08
a	B1/08
a	B1/08
b	A5/08
b	A5/09

M301	
A	C1/07
A	C1/07
A	C1/08
a	A5/13
a	
b	A5/14
b	

M304	
A	C2/11
A	C2/12
A	C2/12
a	
a	
b	A5/15
b	

T301	
a	A5/16
a	
b	
b	

M302	
A	C1/13
A	C1/13
A	C1/13
a	A5/14
a	
b	A5/11
b	

M305	
A	C2/11
A	C2/12
A	C2/12
a	A5/17
a	
b	A5/13
b	

M303	
A	C2/07
A	C2/07
A	C2/07
a	
a	
b	A5/13
b	A5/13

T302	
a	
a	
b	A5/13
b	

SPECIFICATION / SYMBOLS / DESCRIPTION	UPPER LIMIT	PENDANT P.B.S/W	LOAD LIMITER	LIMIT SWITCH
	LS-1	E.S.B	LOAD LIMITER	LS-301,302
	AC 600V 75A	250V 3A	JDL-100	HY - M904
	AC 600V 3A	250V 3A	JDL-100	HY - M904
MAKER	KUKDONG	KG-AUTO	JUNGHO	HANYOUNG

MK	DATE	REVISIONS	CHK.	APP.
4				
3				
2				
1				

CUSTOMER		DRAWING	DESIGN	CHECKED	APPROVED	SCALE	DATE	ORDER NO.
DRAWING TITLE	HOIST CONTROL CIRCUIT DIAGRAM					NONE		
		KD 극동호이스트 주식회사 KUK DONG HOIST CO., LTD.				DWG. NO	KDC2E003	

192.168.11.76 / 2014-04-19 09:50:43
KOREA OCCUPATIONAL SAFETY & HEALTH AGENCY
한국산업안전보건공단
사업장 안전보건 위주 배포 금지

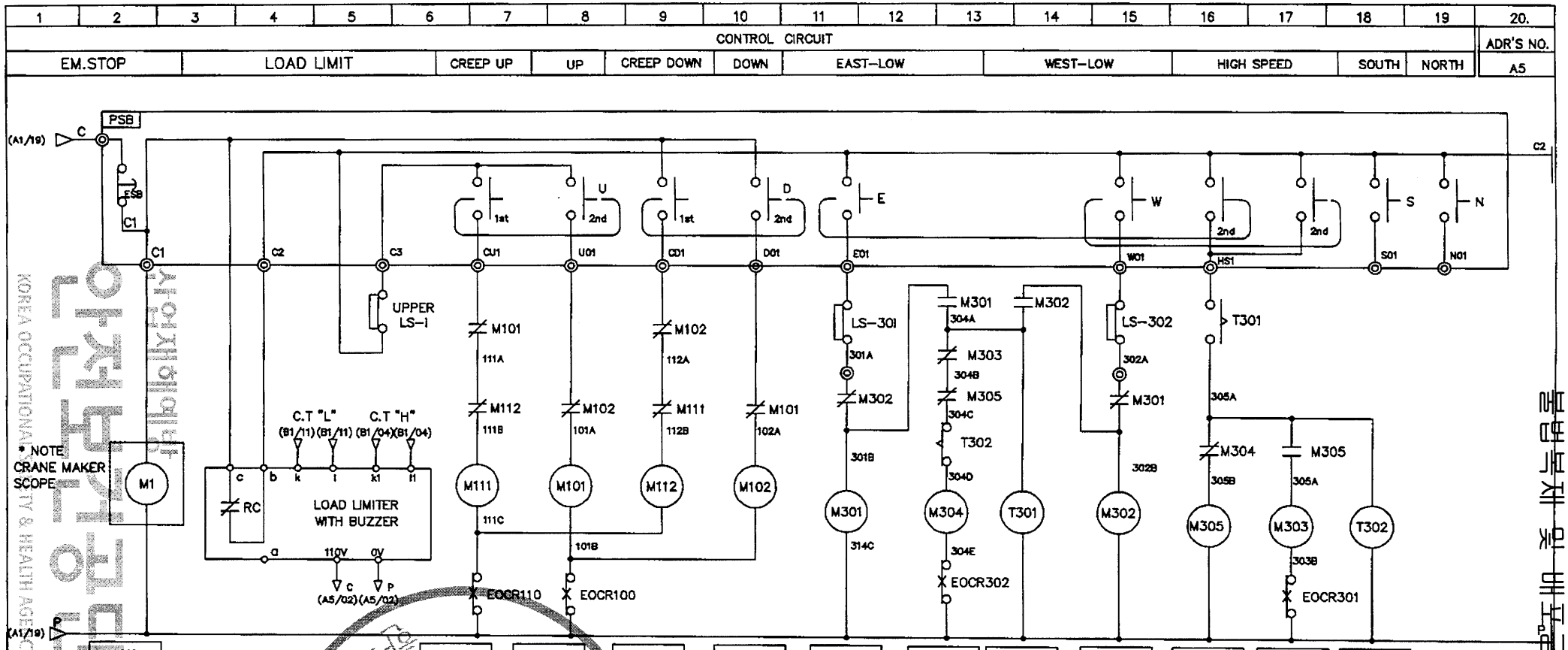

SPECIFICATION / SYMBOLS / DESCRIPTION	UPPER LIMIT	PENDANT P.B S/W	LOAD LIMITER	LIMIT SWITCH
	LS-1	E.S.B	LOAD LIMITER	LS-301,302
	AC 600V 75A	250V 3A	JDL-100	HY - M904
	AC 600V 3A	250V 3A	JDL-100	HY - M904
MAKER	KUKDONG	KG-AUTO	JUNGHO	HANYOUNG

MK	DATE	REVISIONS	CHK.	APP.
4				
3				
2				
1				

CUSTOMER		DRAWING	DESIGN	CHECKED	APPROVED	SCALE	DATE	ORDER NO.
DRAWING TITLE	HOIST CONTROL CIRCUIT DIAGRAM					NONE		
		국동호이스트 주식회사 KUK DONG HOIST CO., LTD.				DWG. NO	KDC2E004	

192.168.11.76 / 2014-04-19 09:50:43
KOREA OCCUPATIONAL SAFETY & HEALTH AGENCY
이 도면은 원본과 틀림없음을 확인합니다

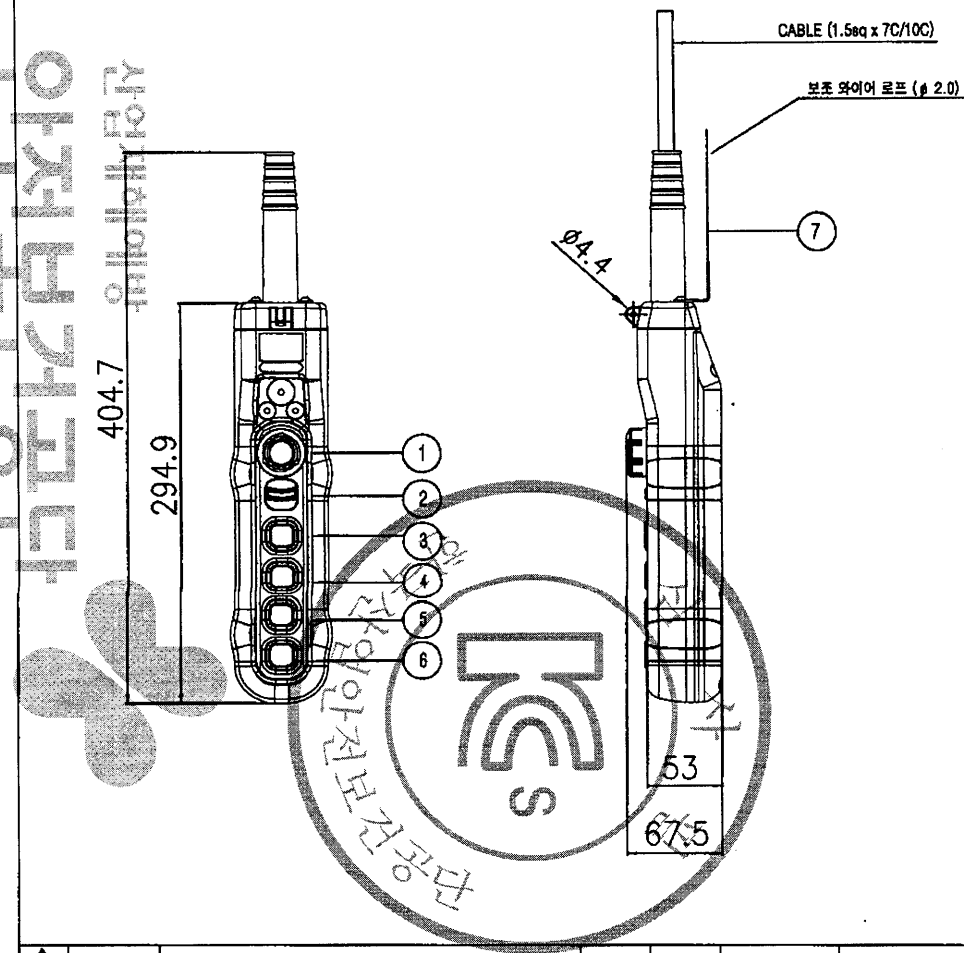

구분 / 색상	조작버튼	표시등
적색	비상	비상
황색	비정상	비정상
녹색	정상	정상
청색	의무	의무
흰색,회색-흑색	지정된의미없음	기타

* MATERIAL : POLYCARBOBATE(PLASTIC)
* BODY COLOR : YELLOW, BLACK
* IP : 55 이상

NO	SYMBOL	TYPE	SPEC.	COLOR
1	E.B.S	PUSH LOCK TURN RESET TYPE	250VAC x 6A	RED
2	SPARE			BLACK
3	상	1PUSH BUTTON 2STEP		
4	하	1PUSH BUTTON 2STEP		
5	동(전)	1PUSH BUTTON 1STEP		
6	서(후)	1PUSH BUTTON 1STEP		
7	보조 와이어	ϕ 2.0		

MK	DATE	REVISIONS	CHK.	APP.
3				
2				
1				

CUSTOMER		DRAWING	DESIGN	CHECKED	APPROVED	SCALE	DATE
DRAWING TITLE	PENDANT PUSH BUTTON SWITCH						
	LAY OUT	KD KUK DONG HOIST CO., LTD.			DWG. NO		

산업재해예방 아저보건공단 KOSHA
KOREA OCCUPATIONAL SAFETY & HEALTH AGENCY
192.168.11.76 / 2014-04-19 09:50:43
불법복제 및 배포금지

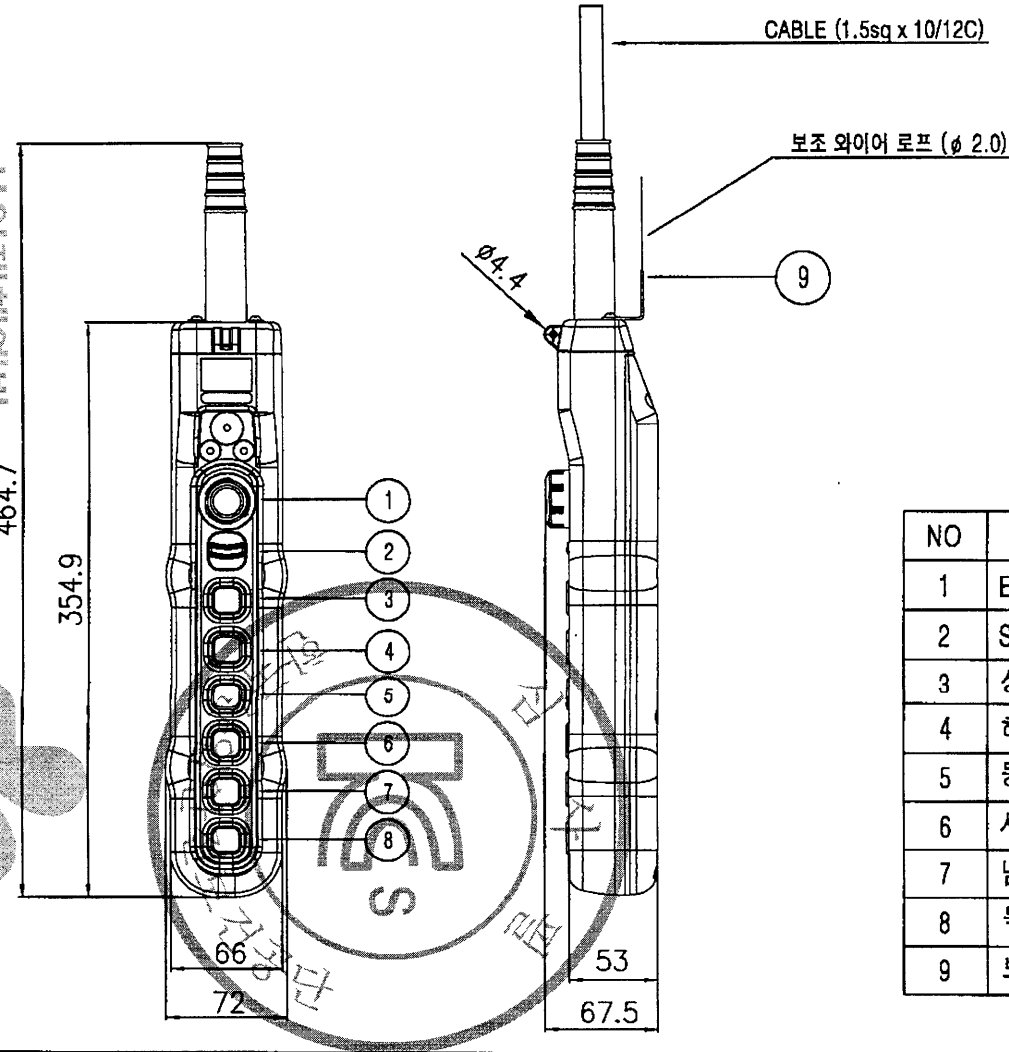

구분 / 색상	조작버튼	표시등
적색	비상	비상
황색	비정상	비정상
녹색	정상	정상
청색	의무	의무
흰색,회색-흑색	지정된의미없음	기타

* MATERIAL : POLYCARBOBATE(PLASTIC)
* BODY COLOR : YELLOW, BLACK
* IP : 55 이상

NO	SYMBOL	TYPE	SPEC.	COLOR
1	E.B.S	PUSH LOCK TURN RESET TYPE	250VAC x 6A	RED
2	SPARE			BLACK
3	상	1PUSH BUTTON 2STEP		
4	하	1PUSH BUTTON 2STEP		
5	동 (좌)	1PUSH BUTTON 1STEP		
6	서 (우)	1PUSH BUTTON 1STEP		
7	남 (전)	1PUSH BUTTON 1STEP		
8	북 (후)	1PUSH BUTTON 1STEP		
9	보조 WIRE	ø 2.0		

MK	DATE	REVISIONS	CHK.	APP.
3				
2				
1				

CUSTOMER		DRAWING	DESIGN	CHECKED	APPROVED	SCALE	DATE
DRAWING TITLE	PENDANT PUSH BUTTON SWITCH						
	LAY OUT	KD KUK DONG HOIST CO., LTD.			DWG. NO		

산업재해예방
아시아산업안전기술단
KOREA OCCUPATIONAL SAFETY & HEALTH AGENCY
192.168.11.76 / 2014-04-19 09:50:43
불법복제 및 배포금지

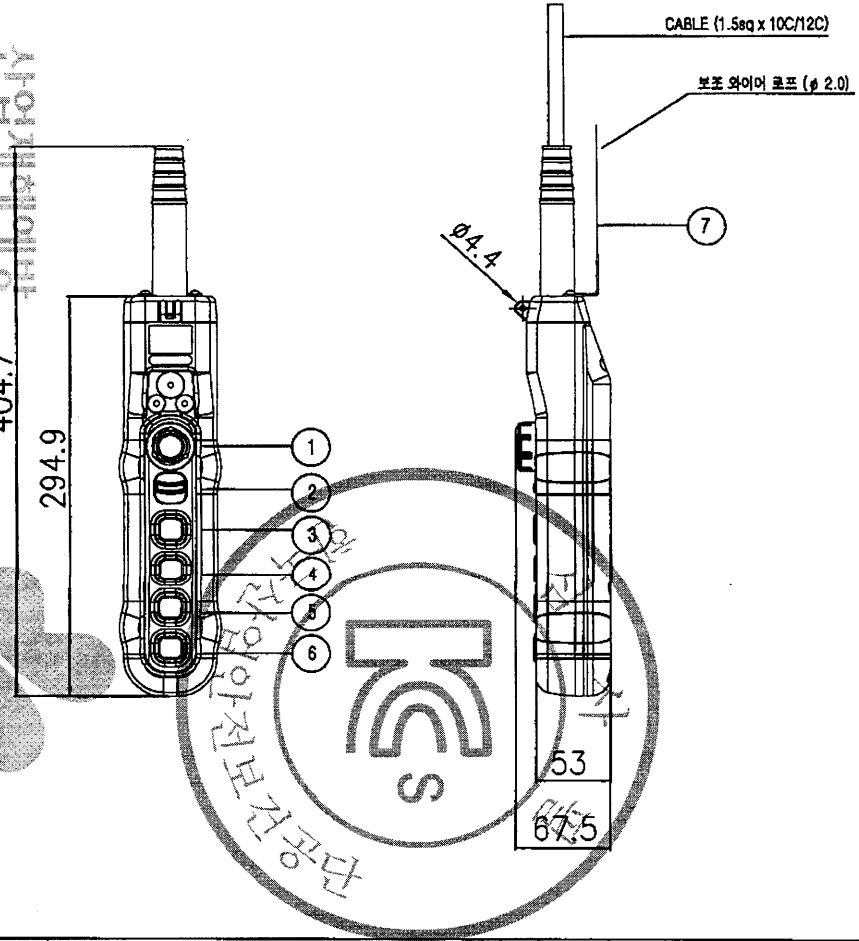

구분 / 색상	조작버튼	표시등
적색	비상	비상
황색	비정상	비정상
녹색	정상	정상
청색	의무	의무
흰색,회색-흑색	지정된의미없음	기타

* MATERIAL : POLYCARBOBATE(PLASTIC)
* BODY COLOR : YELLOW, BLACK
* IP : 55 이상

NO	SYMBOL	TYPE	SPEC.	COLOR
1	E.B.S	PUSH LOCK TURN RESET TYPE	250VAC x 6A	RED
2	SPARE			BLACK
3	상	1PUSH BUTTON 2STEP		
4	하	1PUSH BUTTON 2STEP		
5	동(전)	1PUSH BUTTON 2STEP		
6	서(후)	1PUSH BUTTON 2STEP		
7	보조 와이어	ø 2.0		

MK	DATE	REVISIONS	CHK.	APP.
3				
2				
1				

CUSTOMER	
DRAWING TITLE	PENDANT PUSH BUTTON SWITCH LAY OUT

DRAWING	DESIGN	CHECKED	APPROVED	SCALE	DATE

KD KUK DONG HOIST CO., LTD. DWG. NO

산업재해예방 안전보건공단
한국산업안전보건공단
KOREA OCCUPATIONAL SAFETY & HEALTH AGENCY
192.168.11.76 / 2014-04-19 09:50:43
불법복제 및 배포금지

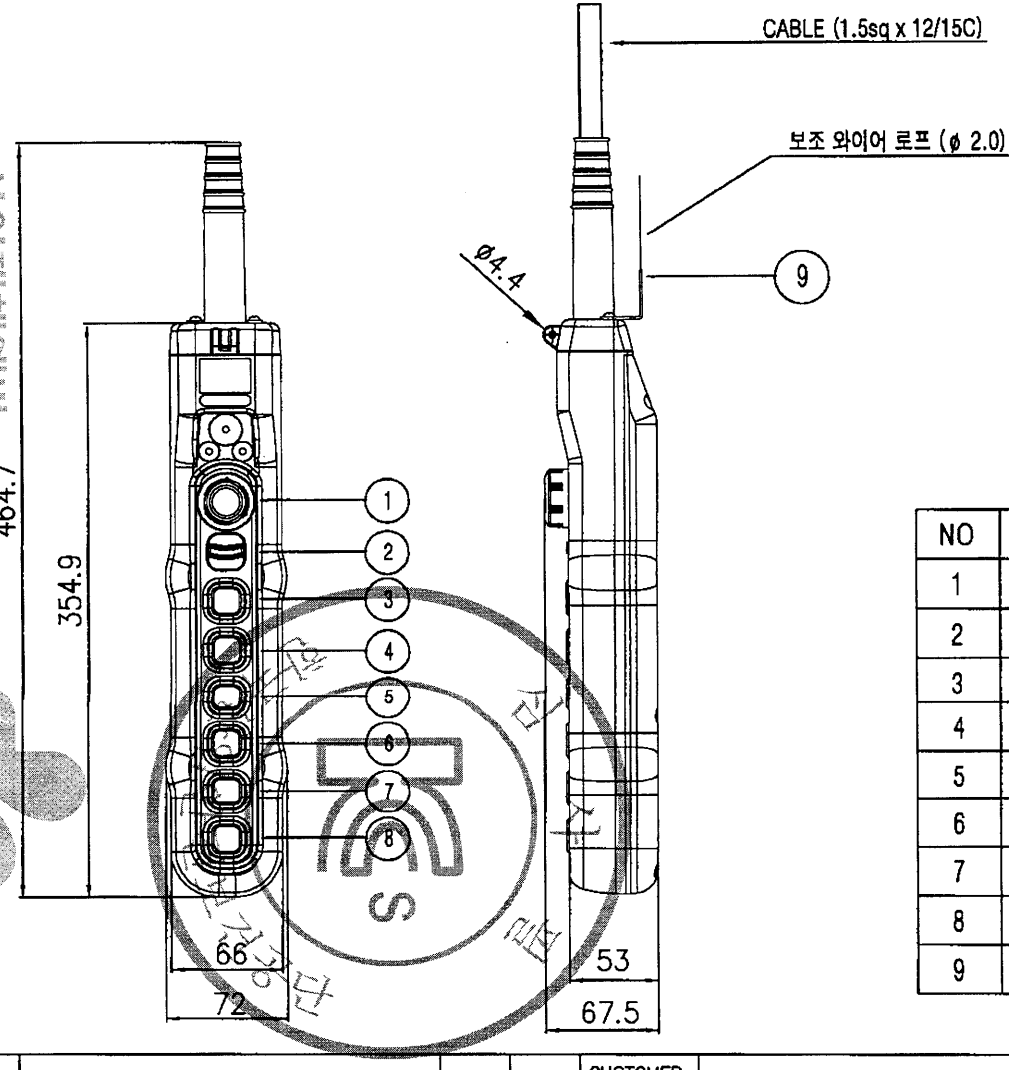

구분 / 색상	조작버튼	표시등
적색	비상	비상
황색	비정상	비정상
녹색	정상	정상
청색	의무	의무
흰색,회색-흑색	지정된의미없음	기타

* MATERIAL : POLYCARBOBATE(PLASTIC)
* BODY COLOR : YELLOW, BLACK
* IP : 55 이상

NO	SYMBOL	TYPE	SPEC.	COLOR
1	E.B.S	PUSH LOCK TURN RESET TYPE	250VAC x 6A	RED
2	SPARE			BLACK
3	상	1PUSH BUTTON 2STEP		
4	하	1PUSH BUTTON 2STEP		
5	동 (좌)	1PUSH BUTTON 2STEP		
6	서 (우)	1PUSH BUTTON 2STEP		
7	남 (전)	1PUSH BUTTON 1STEP		
8	북 (후)	1PUSH BUTTON 1STEP		
9	보조 WIRE	ø 2.0		

MK	DATE	REVISIONS	CHK.	APP.	CUSTOMER		DRAWING	DESIGN	CHECKED	APPROVED	SCALE	DATE
3					DRAWING TITLE	PENDANT PUSH BUTTON SWITCH						
2						LAY OUT	KD KUK DONG HOIST CO., LTD.			DWG. NO		
1												

산업재해예방 안전보건공단
KOREA OCCUPATIONAL SAFETY & HEALTH AGENCY
192.168.11.76 / 2014-04-19 09:50:43
본 문서는 무단 배포금지

불법복제 및 배포금지

Ⅳ. 참 고 도 서

1 LOAD LIMITER 권고 SETTING 치
2 E.O.C.R 권고 SETTING치
3 MOTOR DATA SHEET
4 WIRE ROPE 성적서
5 SUB VENDOR LIST
6 HOIST 취급설명서
7 과부하 방지장치 취급설명서
8 INVERTER 취급설명서

심사필
KCS
한국산업안전보건공단

산업재해예방
안전보건공단
KOREA OCCUPATIONAL SAFETY & HEALTH AGENCY

192.168.11.76 / 2014-04-19 09:51:43

LOAD LIMITER 권고 SETTING치

* POWER SOURCE : AC 3¢ 220V 60Hz

극동호이스트(주)

HOIST	MOTOR 용량	LOAD LIMITER 권고 SETTING치			LOAD CURRENT		C.T MODEL	연결단자 NO	C.T 용량	REMARK
		LOAD CURRENT	ADJ START TIME	SHOCK TIME	100%	110%				
C1 TON	2.4KW x 4P	110%	1 SEC	1 SEC	10 A	11.2 A	CT-2	K-K1, L-L1	5 V.A	
	0.4KW x 4P	110%	1 SEC	1 SEC	2.7 A	3.1 A	CT-1	K-K1, L-L1	5 V.A	
C1.5 TON	3.7KW x 4P	110%	1 SEC	1 SEC	16.0 A	17.4 A	CT-2	K-K1, L-L1	5 V.A	
	0.4KW x 4P	110%	1 SEC	1 SEC	2.7 A	3.1 A	CT-1	K-K1, L-L1	5 V.A	
C2.8 TON	5.0KW x 4P	110%	1 SEC	1 SEC	22.8 A	24.2 A	CT-2	K-K1, L-L1	5 V.A	
	1.5KW x 4P	110%	1 SEC	1 SEC	7.3 A	8.3 A	CT-1	K-K1, L-L1	5 V.A	
C3 TON	5.5KW x 4P	110%	1 SEC	1 SEC	22.8 A	24.3 A	CT-2	K-K1, L-L1	5 V.A	
	1.5KW x 4P	110%	1 SEC	1 SEC	7.3 A	8.3 A	CT-1	K-K1, L-L1	5 V.A	
C5 TON	5.5KW x 6P	110%	1 SEC	1 SEC	28.2 A	30.1 A	CT-2	K-K1, L-L1	5 V.A	
	1.0KW x 6P	110%	1 SEC	1 SEC	6.7 A	8.1 A	CT-1	K-K1, L-L1	5 V.A	
C7.5 TON	5.5KW x 6P	110%	1 SEC	1 SEC	28.2 A	30.1 A	CT-2	K-K1, L-L1	5 V.A	
	1.0KW x 6P	110%	1 SEC	1 SEC	6.7 A	8.1 A	CT-1	K-K1, L-L1	5 V.A	
C10 TON	9.0KW x 8P	110%	1 SEC	1 SEC	45.0 A	49.1 A	CT-2	K-K1, L-L1	5 V.A	
	1.1KW x 8P	110%	1 SEC	1 SEC	8.0 A	9.6 A	CT-2	K-K1, L-L1	5 V.A	

NOTE

1. 상기 TABLE의 수치는 권고 SETTING 수치이며 MOTOR의 특성 및 현장 조건에 따라 변경 가능함.

불법복제 및 배포금지

192.168.11.76 / 2014-04-19 09:51:43

산업안전보건연구원
KOREA OCCUPATIONAL SAFETY & HEALTH AGENCY

LOAD LIMITER 권고 SETTING치

* POWER SOURCE : AC 3¢ 380V 60Hz

극동호이스트(주)

HOIST	MOTOR 용량	LOAD LIMITER 권고 SETTING치			LOAD CURRENT		C.T MODEL	연결단자 NO	C.T 용량	REMARK
		LOAD CURRENT	ADJ START TIME	SHOCK TIME	100%	110%				
C1 TON	2.4KW x 4P	110%	1 SEC	1 SEC	5.8 A	6.3 A	CT-2	K-K1, L-L1	5 V.A	
	0.4KW x 4P	110%	1 SEC	1 SEC	1.6 A	2.1 A	CT-1	K-K1, L-L1	5 V.A	
C1.5 TON	3.7KW x 4P	110%	1 SEC	1 SEC	9.3 A	11.3 A	CT-2	K-K1, L-L1	5 V.A	
	0.4KW x 4P	110%	1 SEC	1 SEC	1.6 A	2.1 A	CT-1	K-K1, L-L1	5 V.A	
C2.8 TON	5.0KW x 4P	110%	1 SEC	1 SEC	12.2 A	13.6 A	CT-2	K-K1, L-L1	5 V.A	
	1.5KW x 4P	110%	1 SEC	1 SEC	4.2 A	5.4 A	CT-1	K-K1, L-L1	5 V.A	
C3 TON	5.5KW x 4P	110%	1 SEC	1 SEC	12.2 A	13.6 A	CT-2	K-K1, L-L1	5 V.A	
	1.5KW x 4P	110%	1 SEC	1 SEC	4.2 A	5.4 A	CT-1	K-K1, L-L1	5 V.A	
C5 TON	5.5KW x 6P	110%	1 SEC	1 SEC	16.3 A	17.8 A	CT-2	K-K1, L-L1	5 V.A	
	1.0KW x 6P	110%	1 SEC	1 SEC	3.9 A	5.3 A	CT-1	K-K1, L-L1	5 V.A	
C7.5 TON	5.5KW x 6P	110%	1 SEC	1 SEC	16.3 A	17.8 A	CT-2	K-K1, L-L1	5 V.A	
	1.0KW x 6P	110%	1 SEC	1 SEC	3.9 A	5.3 A	CT-1	K-K1, L-L1	5 V.A	
C10 TON	9.0KW x 8P	110%	1 SEC	1 SEC	26.0 A	28.6 A	CT-2	K-K1, L-L1	5 V.A	
	1.1KW x 8P	110%	1 SEC	1 SEC	4.6 A	6.1 A	CT-2	K-K1, L-L1	5 V.A	

NOTE

1. 상기 TABLE의 수치는 권고 SETTING 수치이며 MOTOR의 특성 및 현장 조건에 따라 변경 가능함.

무단전재 및 배포금지

KOREA OCCUPATIONAL SAFETY & HEALTH AGENCY

192.168.11.76 / 2014-04-19 09:51:43

LOAD LIMITER 권고 SETTING치

* POWER SOURCE : AC 3¢ 440V 60Hz

극동호이스트(주)

HOIST	MOTOR 용량	LOAD LIMITER 권고 SETTING치			LOAD CURRENT		C.T MODEL	연결단자 NO	C.T 용량	REMARK
		LOAD CURRENT	ADJ START TIME	SHOCK TIME	100%	110%				
C1 TON	2.4KW x 4P	110%	1 SEC	1 SEC	5.0 A	7.3 A	CT-2	K-K1, L-L1	5 V.A	
	0.4KW x 4P	110%	1 SEC	1 SEC	1.4 A	1.8 A	CT-1	K-K1, L-L1	5 V.A	
C1.5 TON	3.7KW x 4P	110%	1 SEC	1 SEC	8.0 A	10.8 A	CT-2	K-K1, L-L1	5 V.A	
	0.4KW x 4P	110%	1 SEC	1 SEC	1.4 A	1.8 A	CT-1	K-K1, L-L1	5 V.A	
C2.8 TON	5.0KW x 4P	110%	1 SEC	1 SEC	10.5 A	13.7 A	CT-2	K-K1, L-L1	5 V.A	
	1.5KW x 4P	110%	1 SEC	1 SEC	3.7 A	4.3 A	CT-1	K-K1, L-L1	5 V.A	
C3 TON	5.5KW x 4P	110%	1 SEC	1 SEC	10.5 A	13.7 A	CT-2	K-K1, L-L1	5 V.A	
	1.5KW x 4P	110%	1 SEC	1 SEC	3.7 A	4.3 A	CT-1	K-K1, L-L1	5 V.A	
C5 TON	5.5KW x 6P	110%	1 SEC	1 SEC	14.1 A	18.5 A	CT-2	K-K1, L-L1	5 V.A	
	1.0KW x 6P	110%	1 SEC	1 SEC	3.3 A	4.7 A	CT-1	K-K1, L-L1	5 V.A	
C7.5 TON	5.5KW x 6P	110%	1 SEC	1 SEC	14.1 A	18.5 A	CT-2	K-K1, L-L1	5 V.A	
	1.0KW x 6P	110%	1 SEC	1 SEC	3.3 A	4.7 A	CT-1	K-K1, L-L1	5 V.A	
C10 TON	9.0KW x 8P	110%	1 SEC	1 SEC	22.5 A	24.8 A	CT-2	K-K1, L-L1	5 V.A	
	1.1KW x 8P	110%	1 SEC	1 SEC	4.0 A	5.4 A	CT-1	K-K1, L-L1	5 V.A	

NOTE

1. 상기 TABLE의 수치는 권고 SETTING 수치이며 MOTOR의 특성 및 현장 조건에 따라 변경 가능함.

무단배포금지

KOREA OCCUPATIONAL SAFETY & HEALTH AGENCY

192.168.11.76 / 2014-04-19 09:51:43

LOAD LIMITER 권고 SETTING치

* POWER SOURCE : AC 3¢ 460V 60Hz

극동호이스트(주)

HOIST	MOTOR 용량	LOAD LIMITER 권고 SETTING치			LOAD CURRENT		C.T MODEL	연결단자 NO	C.T 용량	REMARK
		LOAD CURRENT	ADJ START TIME	SHOCK TIME	100%	110%				
C1 TON	2.4KW x 4P	110%	1 SEC	1 SEC	4.8 A	5.2 A	CT-2	K-K1, L-L1	5 V.A	
	0.4KW x 4P	110%	1 SEC	1 SEC	1.3 A	1.5 A	CT-1	K-K1, L-L1	5 V.A	
C1.5 TON	3.7KW x 4P	110%	1 SEC	1 SEC	7.7 A	8.5 A	CT-2	K-K1, L-L1	5 V.A	
	0.4KW x 4P	110%	1 SEC	1 SEC	1.3 A	1.5 A	CT-1	K-K1, L-L1	5 V.A	
C2.8 TON	5.0KW x 4P	110%	1 SEC	1 SEC	10.0 A	11.5 A	CT-2	K-K1, L-L1	5 V.A	
	1.5KW x 4P	110%	1 SEC	1 SEC	3.5 A	4.3 A	CT-1	K-K1, L-L1	5 V.A	
C3 TON	5.5KW x 4P	110%	1 SEC	1 SEC	10.0 A	11.5 A	CT-2	K-K1, L-L1	5 V.A	
	1.5KW x 4P	110%	1 SEC	1 SEC	3.5 A	4.3 A	CT-1	K-K1, L-L1	5 V.A	
C5 TON	5.5KW x 6P	110%	1 SEC	1 SEC	13.5 A	14.7 A	CT-2	K-K1, L-L1	5 V.A	
	1.0KW x 6P	110%	1 SEC	1 SEC	3.2 A	3.6 A	CT-1	K-K1, L-L1	5 V.A	
C7.5 TON	5.5KW x 6P	110%	1 SEC	1 SEC	13.5 A	14.7 A	CT-2	K-K1, L-L1	5 V.A	
	1.0KW x 6P	110%	1 SEC	1 SEC	3.2 A	3.6 A	CT-1	K-K1, L-L1	5 V.A	
C10 TON	9.0KW x 8P	110%	1 SEC	1 SEC	21.5 A	23.7 A	CT-2	K-K1, L-L1	5 V.A	
	1.1KW x 8P	110%	1 SEC	1 SEC	4.0 A	5.4 A	CT-1	K-K1, L-L1	5 V.A	

NOTE

1. 상기 TABLE의 수치는 권고 SETTING 수치이며 MOTOR의 특성 및 현장 조건에 따라 변경 가능함.

불법복제 및 배포금지

KOREA OCCUPATIONAL SAFETY & HEALTH AGENCY
192.168.11.76 / 2014-04-19 09:51:43

LOAD LIMITER 권고 SETTING치

* POWER SOURCE : AC 3¢ 480V 60Hz

극동호이스트(주)

HOIST	MOTOR 용량	LOAD LIMITER 권고 SETTING치			LOAD CURRENT		C.T MODEL	연결단자 NO	C.T 용량	REMARK
		LOAD CURRENT	ADJ START TIME	SHOCK TIME	100%	110%				
C1 TON	2.4KW x 4P	110%	1 SEC	1 SEC	4.6 A	5.0 A	CT-2	K-K1, L-L1	5 V.A	
	0.4KW x 4P	110%	1 SEC	1 SEC	1.2 A	1.35 A	CT-1	K-K1, L-L1	5 V.A	
C1.5 TON	3.7KW x 4P	110%	1 SEC	1 SEC	7.3 A	8.2 A	CT-2	K-K1, L-L1	5 V.A	
	0.4KW x 4P	110%	1 SEC	1 SEC	1.2 A	1.35 A	CT-1	K-K1, L-L1	5 V.A	
C2.8 TON	5.0KW x 4P	110%	1 SEC	1 SEC	9.6 A	11.2 A	CT-2	K-K1, L-L1	5 V.A	
	1.5KW x 4P	110%	1 SEC	1 SEC	3.4 A	4.3 A	CT-1	K-K1, L-L1	5 V.A	
C3 TON	5.5KW x 4P	110%	1 SEC	1 SEC	9.6 A	11.2 A	CT-2	K-K1, L-L1	5 V.A	
	1.5KW x 4P	110%	1 SEC	1 SEC	3.4 A	4.3 A	CT-1	K-K1, L-L1	5 V.A	
C5 TON	5.5KW x 6P	110%	1 SEC	1 SEC	12.9 A	14.2 A	CT-2	K-K1, L-L1	5 V.A	
	1.0KW x 6P	110%	1 SEC	1 SEC	3.1 A	3.5 A	CT-1	K-K1, L-L1	5 V.A	
C7.5 TON	5.5KW x 6P	110%	1 SEC	1 SEC	12.9 A	14.2 A	CT-2	K-K1, L-L1	5 V.A	
	1.0KW x 6P	110%	1 SEC	1 SEC	3.1 A	3.5 A	CT-1	K-K1, L-L1	5 V.A	
C10 TON	9.0KW x 8P	110%	1 SEC	1 SEC	20.6 A	22.7 A	CT-2	K-K1, L-L1	5 V.A	
	1.1KW x 8P	110%	1 SEC	1 SEC	4.0 A	5.4 A	CT-1	K-K1, L-L1	5 V.A	

NOTE

1. 상기 TABLE의 수치는 권고 SETTING 수치이며 MOTOR의 특성 및 현장 조건에 따라 변경 가능함.

KOREA OCCUPATIONAL SAFETY & HEALTH AGENCY
192.168.11.76 / 2014-04-19 09:51:43
불법복제 및 배포금지

E.O.C.R 권고 SETTING치

* POWER SOURCE : AC 3¢ 220V 60Hz

극동호이스트(주)

HOIST	MOTOR 용량	MOTOR 정격 전류	DRIVE TYPE	E.O.C.R TYPE	권고 SETTING 치			REMARK
					DELAY TIME	OPERATION TIME	CURRENT	
C1 TON	2.4KW x 4P	10.0 A	1 DRAVE	SS-30	3 SEC	1 SEC	10.0 A	
	0.4KW x 4P	2.7 A	1 DRAVE	SS-05	3 SEC	1 SEC	2.7 A	
C1.5 TON	3.7KW x 4P	16.0 A	1 DRAVE	SS-30	3 SEC	1 SEC	16.0 A	
	0.4KW x 4P	2.7 A	1 DRAVE	SS-05	3 SEC	1 SEC	2.7 A	
C2.8 TON	5.0KW x 4P	22.8 A	1 DRAVE	SS-30	3 SEC	1 SEC	22.8 A	
	1.5KW x 4P	7.3 A	1 DRAVE	SS-30	3 SEC	1 SEC	7.3 A	
C3 TON	5.5KW x 4P	22.8 A	1 DRAVE	SS-30	3 SEC	1 SEC	22.8 A	
	1.5KW x 4P	7.3 A	1 DRAVE	SS-30	3 SEC	1 SEC	7.3 A	
C5 TON	5.5KW x 6P	28.2 A	1 DRAVE	SS-30	3 SEC	1 SEC	28.2 A	
	1.0KW x 6P	6.7 A	1 DRAVE	SS-30	3 SEC	1 SEC	6.7 A	
C7.5 TON	5.5KW x 6P	28.2 A	1 DRAVE	SS-30	3 SEC	1 SEC	28.2 A	
	1.0KW x 6P	6.7 A	1 DRAVE	SS-30	3 SEC	1 SEC	6.7 A	
C10 TON	9.0KW x 8P	45.0 A	1 DRAVE	SS-60	3 SEC	1 SEC	45.0 A	
	1.1KW x 8P	8.0 A	1 DRAVE	SS-30	3 SEC	1 SEC	8.0 A	

NOTE

1. 상기 TABLE의 수치는 권고 SETTING 수치이며 MOTOR의 특성 및 현장 조건에 따라 변경 가능함.

192.168.11.76 / 2014-04-19 09:51:43
KOREA OCCUPATIONAL SAFETY & HEALTH AGENCY
본 사본은 원본과 동일함을 증명합니다
사본 증명 발급 기관 한국산업안전공단

E.O.C.R 권고 SETTING치

* POWER SOURCE : AC 3¢ 380V 60Hz

극동호이스트(주)

HOIST	MOTOR 용량	1 정격 전류	DRIVE TYPE	E.O.C.R TYPE	권고 SETTING 치			REMARK
					DELAY TIME	OPERATION TIME	CURRENT	
C1 TON	2.4KW x 4P	5.8 A	1 DRAVE	SS-30	3 SEC	1 SEC	5.8 A	
	0.4KW x 4P	1.6 A	1 DRAVE	SS-05	3 SEC	1 SEC	1.6 A%	
C1.5 TON	3.7KW x 4P	9.3 A	1 DRAVE	SS-30	3 SEC	1 SEC	9.3 A	
	0.4KW x 4P	1.6 A	1 DRAVE	SS-05	3 SEC	1 SEC	1.6 A	
C2.8 TON	5.0KW x 4P	12.2 A	1 DRAVE	SS-30	3 SEC	1 SEC	12.2 A	
	1.5KW x 4P	4.2 A	1 DRAVE	SS-05	3 SEC	1 SEC	4.2 A	
C3 TON	5.5KW x 4P	12.2 A	1 DRAVE	SS-30	3 SEC	1 SEC	12.2 A	
	1.5KW x 4P	4.2 A	1 DRAVE	SS-05	3 SEC	1 SEC	4.2 A	
C5 TON	5.5KW x 6P	16.3 A	1 DRAVE	SS-30	3 SEC	1 SEC	16.3 A	
	1.0KW x 6P	3.9 A	1 DRAVE	SS-05	3 SEC	1 SEC	3.9 A	
C7.5 TON	5.5KW x 6P	16.3 A	1 DRAVE	SS-30	3 SEC	1 SEC	16.3 A	
	1.0KW x 6P	3.9 A	1 DRAVE	SS-05	3 SEC	1 SEC	3.9 A	
C10 TON	9.0KW x 8P	26.0 A	1 DRAVE	SS-30	3 SEC	1 SEC	26.0 A	
	1.1KW x 8P	4.6 A	1 DRAVE	SS-05	3 SEC	1 SEC	4.6 A	

NOTE

1. 상기 TABLE의 수치는 권고 SETTING 수치이며 MOTOR의 특성 및 현장 조건에 따라 변경 가능함.

불법복제 및 배포금지

192.168.11.76 / 2014-04-19 09:51:43

E.O.C.R 권고 SETTING치

* POWER SOURCE : AC 3¢ 440V 60Hz

극동호이스트(주)

HOIST	MOTOR 용량	MOTOR 정격 전류	DRIVE TYPE	E.O.C.R TYPE	권고 SETTING 치			REMARK
					DELAY TIME	OPERATION TIME	CURRENT	
C1 TON	2.4KW x 4P	5.0 A	1 DRAVE	SS-30	3 SEC	1 SEC	5.0 A	
	0.4KW x 4P	1.4 A	1 DRAVE	SS-05	3 SEC	1 SEC	1.4 A	
C1.5 TON	3.7KW x 4P	8.0 A	1 DRAVE	SS-30	3 SEC	1 SEC	8.0 A	
	0.4KW x 4P	1.4 A	1 DRAVE	SS-05	3 SEC	1 SEC	1.4 A	
C2.8 TON	5.0KW x 4P	10.5 A	1 DRAVE	SS-30	3 SEC	1 SEC	10.5 A	
	1.5KW x 4P	3.7 A	1 DRAVE	SS-05	3 SEC	1 SEC	3.7 A	
C3 TON	5.5KW x 4P	10.5 A	1 DRAVE	SS-30	3 SEC	1 SEC	10.5 A	
	1.5KW x 4P	3.7 A	1 DRAVE	SS-05	3 SEC	1 SEC	3.7 A	
C5 TON	5.5KW x 6P	14.1 A	1 DRAVE	SS-30	3 SEC	1 SEC	14.1 A	
	1.0KW x 6P	3.3 A	1 DRAVE	SS-05	3 SEC	1 SEC	3.3 A	
C7.5 TON	5.5KW x 6P	14.1 A	1 DRAVE	SS-30	3 SEC	1 SEC	14.1 A	
	1.0KW x 6P	3.3 A	1 DRAVE	SS-05	3 SEC	1 SEC	3.3 A	
C10 TON	9.0KW x 8P	22.5 A	1 DRAVE	SS-30	3 SEC	1 SEC	22.5 A	
	1.1KW x 8P	4.0 A	1 DRAVE	SS-05	3 SEC	1 SEC	4.0 A	

NOTE

1. 상기 TABLE의 수치는 권고 SETTING 수치이며 MOTOR의 특성 및 현장 조건에 따라 변경 가능함.

불법복제 및 배포금지

192.168.11.76 / 2014-04-19 09:51:43

KOREA OCCUPATIONAL SAFETY & HEALTH AGENCY

E.O.C.R 권고 SETTING치

* POWER SOURCE : AC 3¢ 460V 60Hz

극동호이스트(주)

HOIST	MOTOR 용량	MOTOR 정격 전류	DRIVE TYPE	E.O.C.R TYPE	권고 SETTING 치			REMARK
					DELAY TIME	OPERATION TIME	CURRENT	
C1 TON	2.4KW x 4P	4.8 A	1 DRAVE	SS-30	3 SEC	1 SEC	4.8 A	
	0.4KW x 4P	1.4 A	1 DRAVE	SS-05	3 SEC	1 SEC	1.4 A	
C1.5 TON	3.7KW x 4P	7.7 A	1 DRAVE	SS-30	3 SEC	1 SEC	7.7 A	
	0.4KW x 4P	1.3 A	1 DRAVE	SS-05	3 SEC	1 SEC	1.4 A	
C2.8 TON	5.0KW x 4P	10.0 A	1 DRAVE	SS-30	3 SEC	1 SEC	10.0 A	
	1.5KW x 4P	3.5 A	1 DRAVE	SS-05	3 SEC	1 SEC	3.5 A	
C3 TON	5.5KW x 4P	10.0 A	1 DRAVE	SS-30	3 SEC	1 SEC	10.0 A	
	1.5KW x 4P	3.5 A	1 DRAVE	SS-05	3 SEC	1 SEC	3.5 A	
C5 TON	5.5KW x 6P	13.5 A	1 DRAVE	SS-30	3 SEC	1 SEC	13.5 A	
	1.0KW x 6P	3.2 A	1 DRAVE	SS-05	3 SEC	1 SEC	3.2 A	
C7.5 TON	5.5KW x 6P	13.5 A	1 DRAVE	SS-30	3 SEC	1 SEC	13.5 A	
	1.0KW x 6P	3.2 A	1 DRAVE	SS-05	3 SEC	1 SEC	3.2 A	
C10 TON	9.0KW x 8P	21.5 A	1 DRAVE	SS-30	3 SEC	1 SEC	21.5 A	
	1.1KW x 8P	4.0 A	1 DRAVE	SS-05	3 SEC	1 SEC	4.0 A	

NOTE

1. 상기 TABLE의 수치는 권고 SETTING 수치이며 MOTOR의 특성 및 현장 조건에 따라 변경 가능함.

무단배포금지

KOREA OCCUPATIONAL SAFETY & HEALTH AGENCY

192.168.11.76 / 2014-04-19 09:51:43

E.O.C.R 권고 SETTING치

* POWER SOURCE : AC 3¢ 480V 60Hz

극동호이스트(주)

HOIST	MOTOR 용량	MOTOR 정격 전류	DRIVE TYPE	E.O.C.R TYPE	권고 SETTING 치			REMARK
					DELAY TIME	OPERATION TIME	CURRENT	
C1 TON	2.4KW x 4P	4.6 A	1 DRAVE	SS-30	3 SEC	1 SEC	4.6 A	
	0.4KW x 4P	1.4 A	1 DRAVE	SS-05	3 SEC	1 SEC	1.4 A	
C1.5 TON	3.7KW x 4P	7.3 A	1 DRAVE	SS-30	3 SEC	1 SEC	7.3 A	
	0.4KW x 4P	1.2 A	1 DRAVE	SS-05	3 SEC	1 SEC	1.4 A	
C2.8 TON	5.0KW x 4P	9.6 A	1 DRAVE	SS-30	3 SEC	1 SEC	9.6 A	
	1.5KW x 4P	3.4 A	1 DRAVE	SS-05	3 SEC	1 SEC	3.4 A	
C3 TON	5.5KW x 4P	9.6 A	1 DRAVE	SS-30	3 SEC	1 SEC	9.6 A	
	1.5KW x 4P	3.4 A	1 DRAVE	SS-05	3 SEC	1 SEC	3.4 A	
C5 TON	5.5KW x 6P	12.9 A	1 DRAVE	SS-30	3 SEC	1 SEC	12.9 A	
	1.0KW x 6P	3.1 A	1 DRAVE	SS-05	3 SEC	1 SEC	3.1 A	
C7.5 TON	5.5KW x 6P	12.9 A	1 DRAVE	SS-30	3 SEC	1 SEC	12.9 A	
	1.0KW x 6P	3.1 A	1 DRAVE	SS-05	3 SEC	1 SEC	3.1 A	
C10 TON	9.0KW x 8P	20.6 A	1 DRAVE	SS-30	3 SEC	1 SEC	20.6 A	
	1.1KW x 8P	4.0 A	1 DRAVE	SS-05	3 SEC	1 SEC	4.0 A	

NOTE

1. 상기 TABLE의 수치는 권고 SETTING 수치이며 MOTOR의 특성 및 현장 조건에 따라 변경 가능함.

산업재해예방
안전보건공단
KOREA OCCUPATIONAL SAFETY & HEALTH AGENCY
192.168.11.76 / 2014-04-19 09:51:43
불법복제 및 배포금지

불법복제 및 배포금지

THREE PHASE INDUCTION MOTOR DATE SHEET

SCHEDULE OF TECHNICAL DATA

1. SERVICE	HOISTING
2. MANUFACTURE	극동호이스트 (주)
3. FRAME NUMBER	112 M
4. RATED POWER	3.7 KW x 4 P
5. RATED VOLTAGE AND FREQUENCY	220 V 60 Hz
6. MOTOR TYPE	SQUIRREL CAGE ROTOR TYPE
7. SERVICE FACTOR AND RATTING	1 . 0 , 30 MIN
8. LOCATION AND INSULATION CLASS	INDOOR, OUTDOOR, B CLASS
9. DESIGN TRMPERATURE RISE(BY RESISTANCE)	80 ℃
10. FULL LOAD SPEED	1760 RPM
11. FULL LOAD CURRENT	16 A
12. LOCKED ROTOR CURRENT	81.5 A
13. MINIMUM STARTING VOLTAGE	200 V
14. EFFICIENCY AT 100% RATED LOAD	83.5 %
15. POWER FACTOR AT 100% RATED LOAD	79.3 %
16. FULL LOAD TORQUE	4.4 KGM
17. SITE ALTTITUDE(UNDER)	1000 M
18. ENCLOSURE & COOLING METHOD	T E N V
19. TYPE OF BEARING	PL : 6206zz OPL : 6206zz
20. MOUNTING	H O R I Z O N T A L
21. MAXIMUM AMBIENT TEMPURE	40 ℃
22. BEARING LUBRICATION	G R E A S E
23. STARTING METHOD	F U L L V O L T A G E

검 사 필
한국산업안전보건공단
산업재해예방
안전보건공단
KOREA OCCUPATIONAL SAFETY & HEALTH AGENCY
192.168.11.76 / 2014-04-19 09:51:43

불법복제 및 배포금지

THREE PHASE INDUCTION MOTOR DATE SHEET

SCHEDULE OF TECHNICAL DATA

1. SERVICE	HOISTING
2. MANUFACTURE	극동호이스트 (주)
3. FRAME NUMBER	112 M
4. RATED POWER	3.7 KW x 4 P
5. RATED VOLTAGE AND FREQUENCY	380 V 60 Hz
6. MOTOR TYPE	SQUIRREL CAGE ROTOR TYPE
7. SERVICE FACTOR AND RATTING	1 . 0 , 30 MIN
8. LOCATION AND INSULATION CLASS	INDOOR, OUTDOOR, B CLASS
9. DESIGN TRMPERATURE RISE(BY RESISTANCE)	80 ℃
10. FULL LOAD SPEED	1760 RPM
11. FULL LOAD CURRENT	9.3 A
12. LOCKED ROTOR CURRENT	56.8 A
13. MINIMUM STARTING VOLTAGE	342 V
14. EFFICIENCY AT 100% RATED LOAD	83.5 %
15. POWER FACTOR AT 100% RATED LOAD	79.3 %
16. FULL LOAD TORQUE	4.4 KG.M
17. SITE ALTTITUDE(UNDER)	1000 M
18. ENCLOSURE & COOLING METHOD	T E N V
19. TYPE OF BEARING	PL : 6206zz OPL : 6206zz
20. MOUNTING	H O R I Z O N T A L
21. MAXIMUM AMBIENT TEMPURE	40 ℃
22. BEARING LUBRICATION	G R E A S E
23. STARTING METHOD	F U L L V O L T A G E

검사
한국산업안전보건공단
산업재해예방
안전보건공단
KOREA OCCUPATIONAL SAFETY & HEALTH AGENCY
192.168.11.76 / 2014-04-19 09:51:43

불법복제 및 배포금지

THREE PHASE INDUCTION MOTOR DATE SHEET

SCHEDULE OF TECHNICAL DATA

1. SERVICE	HOISTING
2. MANUFACTURE	극동호이스트 (주)
3. FRAME NUMBER	112 M
4. RATED POWER	3.7 KW x 4 P
5. RATED VOLTAGE AND FREQUENCY	440 V 60 Hz
6. MOTOR TYPE	SQUIRREL CAGE ROTOR TYPE
7. SERVICE FACTOR AND RATTING	1 . 0 , 30 MIN
8. LOCATION AND INSULATION CLASS	INDOOR, OUTDOOR, B CLASS
9. DESIGN TRMPERATURE RISE(BY RESISTANCE)	80 ℃
10. FULL LOAD SPEED	1760 RPM
11. FULL LOAD CURRENT	8.0 A
12. LOCKED ROTOR CURRENT	44.7 A
13. MINIMUM STARTING VOLTAGE	400 V
14. EFFICIENCY AT 100% RATED LOAD	83.5 %
15. POWER FACTOR AT 100% RATED LOAD	79.8 %
16. FULL LOAD TORQUE	4.4 KGM
17. SITE ALTTITUDE(UNDER)	1000 M
18. ENCLOSURE & COOLING METHOD	T E N V
19. TYPE OF BEARING	PL : 6206zz OPL : 6206zz
20. MOUNTING	H O R I Z O N T A L
21. MAXIMUM AMBIENT TEMPURE	40 ℃
22. BEARING LUBRICATION	G R E A S E
23. STARTING METHOD	F U L L V O L T A G E

검사 대조
한국산업인전보건공단
산업재해예방
안전보건공단
KOREA OCCUPATIONAL SAFETY & HEALTH AGENCY
192.168.11.76 / 2014-04-19 09:51:43

불법복제 및 배포금지

THREE PHASE INDUCTION MOTOR DATE SHEET

SCHEDULE OF TECHNICAL DATA

1. SERVICE	HOISTING
2. MANUFACTURE	극동호이스트 (주)
3. FRAME NUMBER	112 M
4. RATED POWER	3.7 KW x 4 P
5. RATED VOLTAGE AND FREQUENCY	460 V 60 Hz
6. MOTOR TYPE	SQUIRREL CAGE ROTOR TYPE
7. SERVICE FACTOR AND RATTING	1 . 0 , 30 MIN
8. LOCATION AND INSULATION CLASS	INDOOR, OUTDOOR, B CLASS
9. DESIGN TRMPERATURE RISE(BY RESISTANCE)	80 ℃
10. FULL LOAD SPEED	1760 RPM
11. FULL LOAD CURRENT	8.0 A
12. LOCKED ROTOR CURRENT	44.7 A
13. MINIMUM STARTING VOLTAGE	400 V
14. EFFICIENCY AT 100% RATED LOAD	83.5 %
15. POWER FACTOR AT 100% RATED LOAD	79.3 %
16. FULL LOAD TORQUE	4.4 KG.M
17. SITE ALTTITUDE(UNDER)	1000 M
18. ENCLOSURE & COOLING METHOD	T E N V
19. TYPE OF BEARING	PL : 6206zz OPL : 6206zz
20. MOUNTING	H O R I Z O N T A L
21. MAXIMUM AMBIENT TEMPURE	40 ℃
22. BEARING LUBRICATION	G R E A S E
23. STARTING METHOD	F U L L V O L T A G E

인천보건공단
KOREA OCCUPATIONAL SAFETY & HEALTH AGENCY
192.168.11.76 / 2014-04-19 09:51:43

불법복제 및 배포금지

THREE PHASE INDUCTION MOTOR DATE SHEET

SCHEDULE OF TECHNICAL DATA

1. SERVICE	HOISTING
2. MANUFACTURE	극동호이스트 (주)
3. FRAME NUMBER	112 M
4. RATED POWER	3.7 KW x 4 P
5. RATED VOLTAGE AND FREQUENCY	480 V 60 Hz
6. MOTOR TYPE	SQUIRREL CAGE ROTOR TYPE
7. SERVICE FACTOR AND RATTING	1 . 0 , 30 MIN
8. LOCATION AND INSULATION CLASS	INDOOR, OUTDOOR, B CLASS
9. DESIGN TRMPERATURE RISE(BY RESISTANCE)	80 ℃
10. FULL LOAD SPEED	1760 RPM
11. FULL LOAD CURRENT	8.0 A
12. LOCKED ROTOR CURRENT	44.7 A
13. MINIMUM STARTING VOLTAGE	400 V
14. EFFICIENCY AT 100% RATED LOAD	83.5 %
15. POWER FACTOR AT 100% RATED LOAD	79.3 %
16. FULL LOAD TORQUE	4.4 KG.M
17. SITE ALTTITUDE(UNDER)	1000 M
18. ENCLOSURE & COOLING METHOD	T E N V
19. TYPE OF BEARING	PL : 6206zz OPL : 6206zz
20. MOUNTING	H O R I Z O N T A L
21. MAXIMUM AMBIENT TEMPURE	40 ℃
22. BEARING LUBRICATION	G R E A S E
23. STARTING METHOD	F U L L V O L T A G E

검사 합격 한국산업안전보건공단
산업재해예방 안전보건공단
KOREA OCCUPATIONAL SAFETY & HEALTH AGENCY
192.168.11.76 / 2014-04-19 09:51:43

불법복제 및 배포금지

THREE PHASE INDUCTION MOTOR DATE SHEET

SCHEDULE OF TECHNICAL DATA

1. SERVICE	CREEP HOISTING
2. MANUFACTURE	극동호이스트 (주)
3. FRAME NUMBER	80
4. RATED POWER	0.4 KW x 4 P
5. RATED VOLTAGE AND FREQUENCY	220 V 60 Hz
6. MOTOR TYPE	SQUIRREL CAGE ROTOR TYPE
7. SERVICE FACTOR AND RATTING	1 . 0 , 30 MIN
8. LOCATION AND INSULATION CLASS	INDOOR, OUTDOOR, B CLASS
9. DESIGN TRMPERATURE RISE(BY RESISTANCE)	80 ℃
10. FULL LOAD SPEED	1740 RPM
11. FULL LOAD CURRENT	2.7 A
12. LOCKED ROTOR CURRENT	14.2 A
13. MINIMUM STARTING VOLTAGE	200 V
14. EFFICIENCY AT 100% RATED LOAD	63.5 %
15. POWER FACTOR AT 100% RATED LOAD	61.5 %
16. FULL LOAD TORQUE	0.7 KGM
17. SITE ALTTITUDE(UNDER)	1000 M
18. ENCLOSURE & COOLING METHOD	T E N V
19. TYPE OF BEARING	PL : 6205zz OPL : 6204zz
20. MOUNTING	H O R I Z O N T A L
21. MAXIMUM AMBIENT TEMPURE	40 ℃
22. BEARING LUBRICATION	G R E A S E
23. STARTING METHOD	F U L L V O L T A G E

검사
한국산업안전보건공단
산업재해예방
안전보건공단
KOREA OCCUPATIONAL SAFETY & HEALTH AGENCY
192.168.11.76 / 2014-04-19 09:51:43

불법복제 및 배포금지

THREE PHASE INDUCTION MOTOR DATE SHEET

SCHEDULE OF TECHNICAL DATA

1. SERVICE	CREEP HOISTING
2. MANUFACTURE	극동호이스트 (주)
3. FRAME NUMBER	80
4. RATED POWER	0.4 KW x 4 P
5. RATED VOLTAGE AND FREQUENCY	380 V 60 Hz
6. MOTOR TYPE	SQUIRREL CAGE ROTOR TYPE
7. SERVICE FACTOR AND RATTING	1.0 , 30 MIN
8. LOCATION AND INSULATION CLASS	INDOOR, OUTDOOR, B CLASS
9. DESIGN TRMPERATURE RISE(BY RESISTANCE)	80 ℃
10. FULL LOAD SPEED	1740 RPM
11. FULL LOAD CURRENT	1.6 A
12. LOCKED ROTOR CURRENT	8.3 A
13. MINIMUM STARTING VOLTAGE	345 V
14. EFFICIENCY AT 100% RATED LOAD	63.5 %
15. POWER FACTOR AT 100% RATED LOAD	61.5 %
16. FULL LOAD TORQUE	0.7 KG.M
17. SITE ALTTITUDE(UNDER)	1000 M
18. ENCLOSURE & COOLING METHOD	TENV
19. TYPE OF BEARING	PL : 6205zz OPL : 6204zz
20. MOUNTING	HORIZONTAL
21. MAXIMUM AMBIENT TEMPURE	40 ℃
22. BEARING LUBRICATION	GREASE
23. STARTING METHOD	FULL VOLTAGE

검사필
한국산업안전보건공단
인천보건공단
KOREA OCCUPATIONAL SAFETY & HEALTH AGENCY
192.168.11.76 / 2014-04-19 09:51:43

불법복제 및 배포금지

THREE PHASE INDUCTION MOTOR DATE SHEET

SCHEDULE OF TECHNICAL DATA

1. SERVICE	CREEP HOISTING
2. MANUFACTURE	극동호이스트 (주)
3. FRAME NUMBER	80
4. RATED POWER	0.4 KW x 4 P
5. RATED VOLTAGE AND FREQUENCY	440 V 60 Hz
6. MOTOR TYPE	SQUIRREL CAGE ROTOR TYPE
7. SERVICE FACTOR AND RATTING	1.0 , 30 MIN
8. LOCATION AND INSULATION CLASS	INDOOR, OUTDOOR, B CLASS
9. DESIGN TRMPERATURE RISE(BY RESISTANCE)	80 ℃
10. FULL LOAD SPEED	1740 RPM
11. FULL LOAD CURRENT	1.4 A
12. LOCKED ROTOR CURRENT	7.1 A
13. MINIMUM STARTING VOLTAGE	400 V
14. EFFICIENCY AT 100% RATED LOAD	63.5 %
15. POWER FACTOR AT 100% RATED LOAD	61.5 %
16. FULL LOAD TORQUE	0.7 KG.M
17. SITE ALTTITUDE(UNDER)	1000 M
18. ENCLOSURE & COOLING METHOD	TENV
19. TYPE OF BEARING	PL : 6205zz OPL : 6204zz
20. MOUNTING	HORIZONTAL
21. MAXIMUM AMBIENT TEMPURE	40 ℃
22. BEARING LUBRICATION	GREASE
23. STARTING METHOD	FULL VOLTAGE

산업재해예방
안전보건공단
KOREA OCCUPATIONAL SAFETY & HEALTH AGENCY

192.168.11.76 / 2014-04-19 09:51:43

불법복제 및 배포금지

THREE PHASE INDUCTION MOTOR DATE SHEET

SCHEDULE OF TECHNICAL DATA

1. SERVICE	CREEP HOISTING
2. MANUFACTURE	극동호이스트 (주)
3. FRAME NUMBER	80
4. RATED POWER	0.4 KW x 4 P
5. RATED VOLTAGE AND FREQUENCY	460 V 60 Hz
6. MOTOR TYPE	SQUIRREL CAGE ROTOR TYPE
7. SERVICE FACTOR AND RATTING	1 . 0 , 30 MIN
8. LOCATION AND INSULATION CLASS	INDOOR, OUTDOOR, B CLASS
9. DESIGN TRMPERATURE RISE(BY RESISTANCE)	80 ℃
10. FULL LOAD SPEED	1740 RPM
11. FULL LOAD CURRENT	1.3 A
12. LOCKED ROTOR CURRENT	6.8 A
13. MINIMUM STARTING VOLTAGE	418 V
14. EFFICIENCY AT 100% RATED LOAD	63.5 %
15. POWER FACTOR AT 100% RATED LOAD	61.5 %
16. FULL LOAD TORQUE	0.7 KG.M
17. SITE ALTTITUDE(UNDER)	1000 M
18. ENCLOSURE & COOLING METHOD	T E N V
19. TYPE OF BEARING	PL : 6205zz OPL : 6204zz
20. MOUNTING	H O R I Z O N T A L
21. MAXIMUM AMBIENT TEMPURE	40 ℃
22. BEARING LUBRICATION	G R E A S E
23. STARTING METHOD	F U L L V O L T A G E

인쇄 사용 제한
한국산업안전보건공단
산업안전보건공단
KOREA OCCUPATIONAL SAFETY & HEALTH AGENCY
192.168.11.76 / 2014-04-19 09:51:43

불법복제 및 배포금지

THREE PHASE INDUCTION MOTOR DATE SHEET

SCHEDULE OF TECHNICAL DATA

1. SERVICE	CREEP HOISTING
2. MANUFACTURE	극동호이스트 (주)
3. FRAME NUMBER	80
4. RATED POWER	0.4 KW x 4 P
5. RATED VOLTAGE AND FREQUENCY	480 V 60 Hz
6. MOTOR TYPE	SQUIRREL CAGE ROTOR TYPE
7. SERVICE FACTOR AND RATTING	1 . 0 , 30 MIN
8. LOCATION AND INSULATION CLASS	INDOOR, OUTDOOR, B CLASS
9. DESIGN TRMPERATURE RISE(BY RESISTANCE)	80 ℃
10. FULL LOAD SPEED	1740 RPM
11. FULL LOAD CURRENT	1.2 A
12. LOCKED ROTOR CURRENT	6.6 A
13. MINIMUM STARTING VOLTAGE	436 V
14. EFFICIENCY AT 100% RATED LOAD	63.5 %
15. POWER FACTOR AT 100% RATED LOAD	61.5 %
16. FULL LOAD TORQUE	0.7 KG.M
17. SITE ALTTITUDE(UNDER)	1000 M
18. ENCLOSURE & COOLING METHOD	T E N V
19. TYPE OF BEARING	PL : 6205zz OPL : 6204zz
20. MOUNTING	H O R I Z O N T A L
21. MAXIMUM AMBIENT TEMPURE	40 ℃
22. BEARING LUBRICATION	G R E A S E
23. STARTING METHOD	F U L L V O L T A G E

사업재해예방
안전보건공단
KOREA OCCUPATIONAL SAFETY & HEALTH AGENCY

192.168.11.76 / 2014-04-19 09:51:43

불법복제 및 배포금지

THREE PHASE INDUCTION MOTOR DATE SHEET

SCHEDULE OF TECHNICAL DATA

1. SERVICE	TRAVERSING
2. MANUFACTURE	극동호이스트(주)
3. FRAME NUMBER	90 S
4. RATED POWER	0.75 KW x 4 P
5. RATED VOLTAGE AND FREQUENCY	220 V 60 Hz
6. MOTOR TYPE	SQUIRREL CAGE ROTOR TYPE
7. SERVICE FACTOR AND RATTING	1.0 , 30 MIN
8. LOCATION AND INSULATION CLASS	INDOOR, OUTDOOR, B CLASS
9. DESIGN TRMPERATURE RISE(BY RESISTANCE)	80 ℃
10. FULL LOAD SPEED	1764 RPM
11. FULL LOAD CURRENT	4.1 A
12. LOCKED ROTOR CURRENT	23.5 A
13. MINIMUM STARTING VOLTAGE	200 V
14. EFFICIENCY AT 100% RATED LOAD	67 %
15. POWER FACTOR AT 100% RATED LOAD	69.5 %
16. FULL LOAD TORQUE	0.85 KG.M
17. SITE ALTTITUDE(UNDER)	1000 M
18. ENCLOSURE & COOLING METHOD	TEFC
19. TYPE OF BEARING	PL : 6205zz OPL : 6204zz
20. MOUNTING	HORIZONTAL
21. MAXIMUM AMBIENT TEMPURE	40 ℃
22. BEARING LUBRICATION	GREASE
23. STARTING METHOD	FULL VOLTAGE

검사 합격
한국산업안전보건공단
산업재해예방
안전보건공단
KOREA OCCUPATIONAL SAFETY & HEALTH AGENCY
192.168.11.76 / 2014-04-19 09:51:43

불법복제 및 배포금지

THREE PHASE INDUCTION MOTOR DATE SHEET

SCHEDULE OF TECHNICAL DATA

1. SERVICE	TRAVERSING
2. MANUFACTURE	극동호이스트(주)
3. FRAME NUMBER	90 S
4. RATED POWER	0.75 KW x 4 P
5. RATED VOLTAGE AND FREQUENCY	380 V 60 Hz
6. MOTOR TYPE	SQUIRREL CAGE ROTOR TYPE
7. SERVICE FACTOR AND RATTING	1.0 , 30 MIN
8. LOCATION AND INSULATION CLASS	INDOOR, OUTDOOR, B CLASS
9. DESIGN TRMPERATURE RISE(BY RESISTANCE)	80 ℃
10. FULL LOAD SPEED	1764 RPM
11. FULL LOAD CURRENT	2.45 A
12. LOCKED ROTOR CURRENT	13.5 A
13. MINIMUM STARTING VOLTAGE	342 V
14. EFFICIENCY AT 100% RATED LOAD	67 %
15. POWER FACTOR AT 100% RATED LOAD	69.5 %
16. FULL LOAD TORQUE	0.85 KG.M
17. SITE ALTTITUDE(UNDER)	1000 M
18. ENCLOSURE & COOLING METHOD	T E F C
19. TYPE OF BEARING	PL : 6205zz OPL : 6204zz
20. MOUNTING	H O R I Z O N T A L
21. MAXIMUM AMBIENT TEMPURE	40 ℃
22. BEARING LUBRICATION	G R E A S E
23. STARTING METHOD	F U L L V O L T A G E

사업개체에서
안전보건공단
KOREA OCCUPATIONAL SAFETY & HEALTH AGENCY

192.168.11.76 / 2014-04-19 09:51:43

불법복제 및 배포금지

THREE PHASE INDUCTION MOTOR DATE SHEET

SCHEDULE OF TECHNICAL DATA

1. SERVICE	TRAVERSING
2. MANUFACTURE	극동호이스트(주)
3. FRAME NUMBER	90 S
4. RATED POWER	0.75 KW x 4 P
5. RATED VOLTAGE AND FREQUENCY	440 V 60 Hz
6. MOTOR TYPE	SQUIRREL CAGE ROTOR TYPE
7. SERVICE FACTOR AND RATTING	1 . 0 , 30 MIN
8. LOCATION AND INSULATION CLASS	INDOOR, OUTDOOR, B CLASS
9. DESIGN TRMPERATURE RISE(BY RESISTANCE)	80 ℃
10. FULL LOAD SPEED	1764 RPM
11. FULL LOAD CURRENT	2.1 A
12. LOCKED ROTOR CURRENT	13.5 A
13. MINIMUM STARTING VOLTAGE	400 V
14. EFFICIENCY AT 100% RATED LOAD	67 %
15. POWER FACTOR AT 100% RATED LOAD	69.5 %
16. FULL LOAD TORQUE	0.85 KG.M
17. SITE ALTTITUDE(UNDER)	1000 M
18. ENCLOSURE & COOLING METHOD	T E F C
19. TYPE OF BEARING	PL : 6205zz OPL : 6204zz
20. MOUNTING	H O R I Z O N T A L
21. MAXIMUM AMBIENT TEMPURE	40 ℃
22. BEARING LUBRICATION	G R E A S E
23. STARTING METHOD	F U L L V O L T A G E

산업재해예방
안전보건공단
KOREA OCCUPATIONAL SAFETY & HEALTH AGENCY

192.168.11.76 / 2014-04-19 09:51:43

불법복제 및 배포금지

THREE PHASE INDUCTION MOTOR DATE SHEET

SCHEDULE OF TECHNICAL DATA

1. SERVICE	TRAVERSING
2. MANUFACTURE	극동호이스트(주)
3. FRAME NUMBER	90 S
4. RATED POWER	0.75 KW x 4 P
5. RATED VOLTAGE AND FREQUENCY	460 V 60 Hz
6. MOTOR TYPE	SQUIRREL CAGE ROTOR TYPE
7. SERVICE FACTOR AND RATTING	1 . 0 , 30 MIN
8. LOCATION AND INSULATION CLASS	INDOOR, OUTDOOR, B CLASS
9. DESIGN TRMPERATURE RISE(BY RESISTANCE)	80 ℃
10. FULL LOAD SPEED	1764 RPM
11. FULL LOAD CURRENT	2.1 A
12. LOCKED ROTOR CURRENT	13.5 A
13. MINIMUM STARTING VOLTAGE	416 V
14. EFFICIENCY AT 100% RATED LOAD	67 %
15. POWER FACTOR AT 100% RATED LOAD	69.5 %
16. FULL LOAD TORQUE	0.85 KG.M
17. SITE ALTTITUDE(UNDER)	1000 M
18. ENCLOSURE & COOLING METHOD	T E F C
19. TYPE OF BEARING	PL : 6205zz OPL : 6204zz
20. MOUNTING	H O R I Z O N T A L
21. MAXIMUM AMBIENT TEMPURE	40 ℃
22. BEARING LUBRICATION	G R E A S E
23. STARTING METHOD	F U L L V O L T A G E

산업재해예방
안전보건공단
KOREA OCCUPATIONAL SAFETY & HEALTH AGENCY

192.168.11.76 / 2014-04-19 09:51:43

불법복제 및 배포금지

THREE PHASE INDUCTION MOTOR DATE SHEET

SCHEDULE OF TECHNICAL DATA

1. SERVICE	TRAVERSING
2. MANUFACTURE	극동호이스트(주)
3. FRAME NUMBER	90 S
4. RATED POWER	0.75 KW x 4 P
5. RATED VOLTAGE AND FREQUENCY	480 V 60 Hz
6. MOTOR TYPE	SQUIRREL CAGE ROTOR TYPE
7. SERVICE FACTOR AND RATTING	1.0 , 30 MIN
8. LOCATION AND INSULATION CLASS	INDOOR, OUTDOOR, B CLASS
9. DESIGN TRMPERATURE RISE(BY RESISTANCE)	80 ℃
10. FULL LOAD SPEED	1764 RPM
11. FULL LOAD CURRENT	2.1 A
12. LOCKED ROTOR CURRENT	13.5 A
13. MINIMUM STARTING VOLTAGE	432 V
14. EFFICIENCY AT 100% RATED LOAD	67 %
15. POWER FACTOR AT 100% RATED LOAD	69.5 %
16. FULL LOAD TORQUE	0.85 KG.M
17. SITE ALTTITUDE(UNDER)	1000 M
18. ENCLOSURE & COOLING METHOD	T E F C
19. TYPE OF BEARING	PL : 6205zz OPL : 6204zz
20. MOUNTING	H O R I Z O N T A L
21. MAXIMUM AMBIENT TEMPURE	40 ℃
22. BEARING LUBRICATION	G R E A S E
23. STARTING METHOD	F U L L V O L T A G E

산업재해예방
안전보건공단
KOREA OCCUPATIONAL SAFETY & HEALTH AGENCY

192.168.11.76 / 2014-04-19 09:51:43

불법복제 및 배포금지

THREE PHASE INDUCTION MOTOR DATE SHEET

SCHEDULE OF TECHNICAL DATA

1. SERVICE	TRAVERSING
2. MANUFACTURE	극동호이스트(주)
3. FRAME NUMBER	90 S
4. RATED POWER	0.5 KW x 6 P
5. RATED VOLTAGE AND FREQUENCY	220 V 60 Hz
6. MOTOR TYPE	SQUIRREL CAGE ROTOR TYPE
7. SERVICE FACTOR AND RATTING	1.0 , 30 MIN
8. LOCATION AND INSULATION CLASS	INDOOR, OUTDOOR, B CLASS
9. DESIGN TRMPERATURE RISE(BY RESISTANCE)	80 ℃
10. FULL LOAD SPEED	1176 RPM
11. FULL LOAD CURRENT	3.4 A
12. LOCKED ROTOR CURRENT	16.4 A
13. MINIMUM STARTING VOLTAGE	200 V
14. EFFICIENCY AT 100% RATED LOAD	64 %
15. POWER FACTOR AT 100% RATED LOAD	59.5 %
16. FULL LOAD TORQUE	0.80 KG.M
17. SITE ALTTITUDE(UNDER)	1000 M
18. ENCLOSURE & COOLING METHOD	TENV
19. TYPE OF BEARING	PL : 6205zz OPL : 6204zz
20. MOUNTING	HORIZONTAL
21. MAXIMUM AMBIENT TEMPURE	40 ℃
22. BEARING LUBRICATION	GREASE
23. STARTING METHOD	FULL VOLTAGE

검 인 대 장
한국산업안전보건공단
산업재해예방
안전보건공단
KOREA OCCUPATIONAL SAFETY & HEALTH AGENCY
192.168.11.76 / 2014-04-19 09:51:43

불법복제 및 배포금지

THREE PHASE INDUCTION MOTOR DATE SHEET

SCHEDULE OF TECHNICAL DATA

1. SERVICE	TRAVERSING
2. MANUFACTURE	극동호이스트(주)
3. FRAME NUMBER	90 S
4. RATED POWER	0.5 KW x 6 P
5. RATED VOLTAGE AND FREQUENCY	380 V 60 Hz
6. MOTOR TYPE	SQUIRREL CAGE ROTOR TYPE
7. SERVICE FACTOR AND RATTING	1 . 0 , 30 MIN
8. LOCATION AND INSULATION CLASS	INDOOR, OUTDOOR, B CLASS
9. DESIGN TRMPERATURE RISE(BY RESISTANCE)	80 ℃
10. FULL LOAD SPEED	1176 RPM
11. FULL LOAD CURRENT	2.0 A
12. LOCKED ROTOR CURRENT	9.5 A
13. MINIMUM STARTING VOLTAGE	345 V
14. EFFICIENCY AT 100% RATED LOAD	64 %
15. POWER FACTOR AT 100% RATED LOAD	59.5 %
16. FULL LOAD TORQUE	0.80 KG.M
17. SITE ALTTITUDE(UNDER)	1000 M
18. ENCLOSURE & COOLING METHOD	T E N V
19. TYPE OF BEARING	PL : 6205zz OPL : 6204zz
20. MOUNTING	H O R I Z O N T A L
21. MAXIMUM AMBIENT TEMPURE	40 ℃
22. BEARING LUBRICATION	G R E A S E
23. STARTING METHOD	F U L L V O L T A G E

산업재해예방
안전보건공단
KOREA OCCUPATIONAL SAFETY & HEALTH AGENCY

192.168.11.76 / 2014-04-19 09:51:43

불법복제 및 배포금지

THREE PHASE INDUCTION MOTOR DATE SHEET

SCHEDULE OF TECHNICAL DATA

1. SERVICE	TRAVERSING
2. MANUFACTURE	극동호이스트(주)
3. FRAME NUMBER	90 S
4. RATED POWER	0.5 KW x 6 P
5. RATED VOLTAGE AND FREQUENCY	440 V 60 Hz
6. MOTOR TYPE	SQUIRREL CAGE ROTOR TYPE
7. SERVICE FACTOR AND RATTING	1.0 , 30 MIN
8. LOCATION AND INSULATION CLASS	INDOOR, OUTDOOR, B CLASS
9. DESIGN TRMPERATURE RISE(BY RESISTANCE)	80 ℃
10. FULL LOAD SPEED	1176 RPM
11. FULL LOAD CURRENT	1.7 A
12. LOCKED ROTOR CURRENT	8.2 A
13. MINIMUM STARTING VOLTAGE	400 V
14. EFFICIENCY AT 100% RATED LOAD	64 %
15. POWER FACTOR AT 100% RATED LOAD	59.5 %
16. FULL LOAD TORQUE	0.80 KG.M
17. SITE ALTTITUDE(UNDER)	1000 M
18. ENCLOSURE & COOLING METHOD	T E N V
19. TYPE OF BEARING	PL : 6205zz OPL : 6204zz
20. MOUNTING	H O R I Z O N T A L
21. MAXIMUM AMBIENT TEMPURE	40 ℃
22. BEARING LUBRICATION	G R E A S E
23. STARTING METHOD	F U L L V O L T A G E

산업재해예방
안전보건공단
KOREA OCCUPATIONAL SAFETY & HEALTH AGENCY

192.168.11.76 / 2014-04-19 09:51:43

불법복제 및 배포금지

THREE PHASE INDUCTION MOTOR DATE SHEET

SCHEDULE OF TECHNICAL DATA

1. SERVICE	TRAVERSING
2. MANUFACTURE	극동호이스트(주)
3. FRAME NUMBER	90 S
4. RATED POWER	0.5 KW x 6 P
5. RATED VOLTAGE AND FREQUENCY	460 V 60 Hz
6. MOTOR TYPE	SQUIRREL CAGE ROTOR TYPE
7. SERVICE FACTOR AND RATTING	1.0 , 30 MIN
8. LOCATION AND INSULATION CLASS	INDOOR, OUTDOOR, B CLASS
9. DESIGN TRMPERATURE RISE(BY RESISTANCE)	80 ℃
10. FULL LOAD SPEED	1176 RPM
11. FULL LOAD CURRENT	1.7 A
12. LOCKED ROTOR CURRENT	7.9 A
13. MINIMUM STARTING VOLTAGE	418 V
14. EFFICIENCY AT 100% RATED LOAD	64 %
15. POWER FACTOR AT 100% RATED LOAD	59.5 %
16. FULL LOAD TORQUE	0.80 KG.M
17. SITE ALTTITUDE(UNDER)	1000 M
18. ENCLOSURE & COOLING METHOD	T E N V
19. TYPE OF BEARING	PL : 6205zz OPL : 6204zz
20. MOUNTING	H O R I Z O N T A L
21. MAXIMUM AMBIENT TEMPURE	40 ℃
22. BEARING LUBRICATION	G R E A S E
23. STARTING METHOD	F U L L V O L T A G E

검사필
한국산업안전보건공단
산업재해예방
안전보건공단
KOREA OCCUPATIONAL SAFETY & HEALTH AGENCY
192.168.11.76 / 2014-04-19 09:51:43

불법복제 및 배포금지

THREE PHASE INDUCTION MOTOR DATE SHEET

SCHEDULE OF TECHNICAL DATA

1. SERVICE	TRAVERSING
2. MANUFACTURE	극동호이스트(주)
3. FRAME NUMBER	90 S
4. RATED POWER	0.5 KW x 6 P
5. RATED VOLTAGE AND FREQUENCY	480 V 60 Hz
6. MOTOR TYPE	SQUIRREL CAGE ROTOR TYPE
7. SERVICE FACTOR AND RATTING	1 . 0 , 30 MIN
8. LOCATION AND INSULATION CLASS	INDOOR, OUTDOOR, B CLASS
9. DESIGN TRMPERATURE RISE(BY RESISTANCE)	80 ℃
10. FULL LOAD SPEED	1176 RPM
11. FULL LOAD CURRENT	1.6 A
12. LOCKED ROTOR CURRENT	7.5 A
13. MINIMUM STARTING VOLTAGE	436 V
14. EFFICIENCY AT 100% RATED LOAD	64 %
15. POWER FACTOR AT 100% RATED LOAD	59.5 %
16. FULL LOAD TORQUE	0.80 KG.M
17. SITE ALTTITUDE(UNDER)	1000 M
18. ENCLOSURE & COOLING METHOD	T E N V
19. TYPE OF BEARING	PL : 6205zz OPL : 6204zz
20. MOUNTING	H O R I Z O N T A L
21. MAXIMUM AMBIENT TEMPURE	40 ℃
22. BEARING LUBRICATION	G R E A S E
23. STARTING METHOD	F U L L V O L T A G E

산업재해예방 안전보건공단
KOREA OCCUPATIONAL SAFETY & HEALTH AGENCY
192.168.11.76 / 2014-04-19 09:51:43

불법복제 및 배포금지

THREE PHASE INDUCTION MOTOR DATE SHEET

SCHEDULE OF TECHNICAL DATA

1. SERVICE	TRAVERSING
2. MANUFACTURE	극동호이스트 (주)
3. FRAME NUMBER	90 L
4. RATED POWER	0.8/0.4 KW x 4/8 P
5. RATED VOLTAGE AND FREQUENCY	220 V 60 Hz
6. MOTOR TYPE	SQUIRREL CAGE ROTOR TYPE
7. SERVICE FACTOR AND RATTING	1.0 , 30 MIN
8. LOCATION AND INSULATION CLASS	INDOOR, OUTDOOR, B CLASS
9. DESIGN TRMPERATURE RISE(BY RESISTANCE)	80 ℃
10. FULL LOAD SPEED	1750 / 850 RPM
11. FULL LOAD CURRENT	4.8/4.25 A
12. LOCKED ROTOR CURRENT	14.2/13.6 A
13. MINIMUM STARTING VOLTAGE	200 V
14. EFFICIENCY AT 100% RATED LOAD	72.8/65.8 %
15. POWER FACTOR AT 100% RATED LOAD	82.3/75 %
16. FULL LOAD TORQUE	0.80 KG.M
17. SITE ALTTITUDE(UNDER)	1000 M
18. ENCLOSURE & COOLING METHOD	T E N V
19. TYPE OF BEARING	PL : 6205zz OPL : 6204zz
20. MOUNTING	H O R I Z O N T A L
21. MAXIMUM AMBIENT TEMPURE	40 ℃
22. BEARING LUBRICATION	G R E A S E
23. STARTING METHOD	F U L L V O L T A G E

산업재해예방
안전보건공단
KOREA OCCUPATIONAL SAFETY & HEALTH AGENCY

192.168.11.76 / 2014-04-19 09:51:43

불법복제 및 배포금지

THREE PHASE INDUCTION MOTOR DATE SHEET

SCHEDULE OF TECHNICAL DATA

1. SERVICE	TRAVERSING
2. MANUFACTURE	극동호이스트 (주)
3. FRAME NUMBER	90 L
4. RATED POWER	0.8/0.4 KW x 4/8 P
5. RATED VOLTAGE AND FREQUENCY	380 V 60 Hz
6. MOTOR TYPE	SQUIRREL CAGE ROTOR TYPE
7. SERVICE FACTOR AND RATTING	1.0 , 30 MIN
8. LOCATION AND INSULATION CLASS	INDOOR, OUTDOOR, B CLASS
9. DESIGN TRMPERATURE RISE(BY RESISTANCE)	80 ℃
10. FULL LOAD SPEED	1750 / 850 RPM
11. FULL LOAD CURRENT	2.78/2.63 A
12. LOCKED ROTOR CURRENT	9.2/6.3 A
13. MINIMUM STARTING VOLTAGE	345 V
14. EFFICIENCY AT 100% RATED LOAD	72.8/65.8 %
15. POWER FACTOR AT 100% RATED LOAD	82.3/75 %
16. FULL LOAD TORQUE	0.80 KG.M
17. SITE ALTTITUDE(UNDER)	1000 M
18. ENCLOSURE & COOLING METHOD	T E N V
19. TYPE OF BEARING	PL : 6205zz OPL : 6204zz
20. MOUNTING	H O R I Z O N T A L
21. MAXIMUM AMBIENT TEMPURE	40 ℃
22. BEARING LUBRICATION	G R E A S E
23. STARTING METHOD	F U L L V O L T A G E

검사필
한국산업안전보건공단
산업재해예방
안전보건공단
KOREA OCCUPATIONAL SAFETY & HEALTH AGENCY
192.168.11.76 / 2014-04-19 09:51:43

불법복제 및 배포금지

THREE PHASE INDUCTION MOTOR DATE SHEET

SCHEDULE OF TECHNICAL DATA

1. SERVICE	TRAVERSING
2. MANUFACTURE	극동호이스트 (주)
3. FRAME NUMBER	90 L
4. RATED POWER	0.8/0.4 KW x 4/8 P
5. RATED VOLTAGE AND FREQUENCY	440 V 60 Hz
6. MOTOR TYPE	SQUIRREL CAGE ROTOR TYPE
7. SERVICE FACTOR AND RATTING	1.0 , 30 MIN
8. LOCATION AND INSULATION CLASS	INDOOR, OUTDOOR, B CLASS
9. DESIGN TRMPERATURE RISE(BY RESISTANCE)	80 ℃
10. FULL LOAD SPEED	1750 / 850 RPM
11. FULL LOAD CURRENT	2.4/2.27 A
12. LOCKED ROTOR CURRENT	8.6/6.21 A
13. MINIMUM STARTING VOLTAGE	400 V
14. EFFICIENCY AT 100% RATED LOAD	72.8/65.8 %
15. POWER FACTOR AT 100% RATED LOAD	82.3/75 %
16. FULL LOAD TORQUE	0.80 KG.M
17. SITE ALTTITUDE(UNDER)	1000 M
18. ENCLOSURE & COOLING METHOD	T.E.N.V
19. TYPE OF BEARING	PL : 6205zz OPL : 6204zz
20. MOUNTING	HORIZONTAL
21. MAXIMUM AMBIENT TEMPURE	40 ℃
22. BEARING LUBRICATION	GREASE
23. STARTING METHOD	FULL VOLTAGE

산업재해예방
안전보건공단
KOREA OCCUPATIONAL SAFETY & HEALTH AGENCY

192.168.11.76 / 2014-04-19 09:51:43

불법복제 및 배포금지

THREE PHASE INDUCTION MOTOR DATE SHEET

SCHEDULE OF TECHNICAL DATA

1. SERVICE	TRAVERSING
2. MANUFACTURE	극동호이스트 (주)
3. FRAME NUMBER	90 L
4. RATED POWER	0.8/0.4 KW x 4/8 P
5. RATED VOLTAGE AND FREQUENCY	460 V 60 Hz
6. MOTOR TYPE	SQUIRREL CAGE ROTOR TYPE
7. SERVICE FACTOR AND RATTING	1 . 0 , 30 MIN
8. LOCATION AND INSULATION CLASS	INDOOR, OUTDOOR, B CLASS
9. DESIGN TRMPERATURE RISE(BY RESISTANCE)	80 ℃
10. FULL LOAD SPEED	1750 / 850 RPM
11. FULL LOAD CURRENT	2.3/2.17 A
12. LOCKED ROTOR CURRENT	8.5/6.18 A
13. MINIMUM STARTING VOLTAGE	418 V
14. EFFICIENCY AT 100% RATED LOAD	72.8/65.8 %
15. POWER FACTOR AT 100% RATED LOAD	82.3/75 %
16. FULL LOAD TORQUE	0.80 KG.M
17. SITE ALTTITUDE(UNDER)	1000 M
18. ENCLOSURE & COOLING METHOD	T E N V
19. TYPE OF BEARING	PL : 6205zz OPL : 6204zz
20. MOUNTING	H O R I Z O N T A L
21. MAXIMUM AMBIENT TEMPURE	40 ℃
22. BEARING LUBRICATION	G R E A S E
23. STARTING METHOD	F U L L V O L T A G E

한국산업안전보건공단
KOREA OCCUPATIONAL SAFETY & HEALTH AGENCY

192.168.11.76 / 2014-04-19 09:51:43

불법복제 및 배포금지

THREE PHASE INDUCTION MOTOR DATE SHEET

SCHEDULE OF TECHNICAL DATA

1. SERVICE	TRAVERSING
2. MANUFACTURE	극동호이스트 (주)
3. FRAME NUMBER	90 L
4. RATED POWER	0.8/0.4 KW x 4/8 P
5. RATED VOLTAGE AND FREQUENCY	480 V 60 Hz
6. MOTOR TYPE	SQUIRREL CAGE ROTOR TYPE
7. SERVICE FACTOR AND RATTING	1.0 , 30 MIN
8. LOCATION AND INSULATION CLASS	INDOOR, OUTDOOR, B CLASS
9. DESIGN TRMPERATURE RISE(BY RESISTANCE)	80 ℃
10. FULL LOAD SPEED	1750 / 850 RPM
11. FULL LOAD CURRENT	2.3/2.1 A
12. LOCKED ROTOR CURRENT	8.4/6.15 A
13. MINIMUM STARTING VOLTAGE	436 V
14. EFFICIENCY AT 100% RATED LOAD	72.8/65.8 %
15. POWER FACTOR AT 100% RATED LOAD	82.3/75 %
16. FULL LOAD TORQUE	0.80 KG.M
17. SITE ALTTITUDE(UNDER)	1000 M
18. ENCLOSURE & COOLING METHOD	TENV
19. TYPE OF BEARING	PL : 6205zz OPL : 6204zz
20. MOUNTING	HORIZONTAL
21. MAXIMUM AMBIENT TEMPURE	40 ℃
22. BEARING LUBRICATION	GREASE
23. STARTING METHOD	FULL VOLTAGE

산업재해예방
안전보건공단
KOREA OCCUPATIONAL SAFETY & HEALTH AGENCY

192.168.11.76 / 2014-04-19 09:51:43

불법복제 및 배포금지

THREE PHASE INDUCTION MOTOR DATE SHEET

SCHEDULE OF TECHNICAL DATA

1. SERVICE	TRAVERSING
2. MANUFACTURE	극동호이스트 (주)
3. FRAME NUMBER	90 L
4. RATED POWER	0.5/025 KW x 6/12 P
5. RATED VOLTAGE AND FREQUENCY	220 V 60 Hz
6. MOTOR TYPE	SQUIRREL CAGE ROTOR TYPE
7. SERVICE FACTOR AND RATTING	1 . 0 , 30 MIN
8. LOCATION AND INSULATION CLASS	INDOOR, OUTDOOR, B CLASS
9. DESIGN TRMPERATURE RISE(BY RESISTANCE)	80 ℃
10. FULL LOAD SPEED	1050/460 RPM
11. FULL LOAD CURRENT	3.2/3.6 A
12. STARTING CURRENT AT RATED VOLTAGE	12.8/10.8 A
13. MINIMUM STARTING VOLTAGE	200 V
14. EFFICIENCY AT 100% RATED LOAD	57.5/35 %
15. POWER FACTOR AT 100% RATED LOAD	64.5/50 %
16. STARTING TORQUE	0.757/0.506 KG.M
17. SITE ALTTITUDE(UNDER)	1000 M
18. ENCLOSURE & COOLING METHOD	T E N V
19. TYPE OF BEARING	PL : 6205zz OPL : 6204zz
20. MOUNTING	H O R I Z O N T A L
21. MAXIMUM AMBIENT TEMPURE	40 ℃
22. BEARING LUBRICATION	G R E A S E
23. STARTING METHOD	F U L L V O L T A G E

검사제
한국산업안전보건공단
산업안전보건연구원
안전보건공단
KOREA OCCUPATIONAL SAFETY & HEALTH AGENCY
192.168.11.76 / 2014-04-19 09:51:43

불법복제 및 배포금지

THREE PHASE INDUCTION MOTOR DATE SHEET

SCHEDULE OF TECHNICAL DATA

1. SERVICE	TRAVERSING
2. MANUFACTURE	극동호이스트 (주)
3. FRAME NUMBER	90 L
4. RATED POWER	0.5/025 KW x 6/12 P
5. RATED VOLTAGE AND FREQUENCY	380 V 60 Hz
6. MOTOR TYPE	SQUIRREL CAGE ROTOR TYPE
7. SERVICE FACTOR AND RATTING	1 . 0 , 30 MIN
8. LOCATION AND INSULATION CLASS	INDOOR, OUTDOOR, B CLASS
9. DESIGN TRMPERATURE RISE(BY RESISTANCE)	80 ℃
10. FULL LOAD SPEED	1050/460 RPM
11. FULL LOAD CURRENT	1.85/2.08 A
12. STARTING CURRENT AT RATED VOLTAGE	7.41/6.25 A
13. MINIMUM STARTING VOLTAGE	345 V
14. EFFICIENCY AT 100% RATED LOAD	57.5/35 %
15. POWER FACTOR AT 100% RATED LOAD	64.5/50 %
16. STARTING TORQUE	0.757/0.506 KG.M
17. SITE ALTTITUDE(UNDER)	1000 M
18. ENCLOSURE & COOLING METHOD	T E N V
19. TYPE OF BEARING	PL : 6205zz OPL : 6204zz
20. MOUNTING	H O R I Z O N T A L
21. MAXIMUM AMBIENT TEMPURE	40 ℃
22. BEARING LUBRICATION	G R E A S E
23. STARTING METHOD	F U L L V O L T A G E

산업재해예방
안전보건공단
KOREA OCCUPATIONAL SAFETY & HEALTH AGENCY

192.168.11.76 / 2014-04-19 09:51:43

불법복제 및 배포금지

THREE PHASE INDUCTION MOTOR DATE SHEET

SCHEDULE OF TECHNICAL DATA

1. SERVICE	TRAVERSING
2. MANUFACTURE	극동호이스트 (주)
3. FRAME NUMBER	90 L
4. RATED POWER	0.5/025 KW x 6/12 P
5. RATED VOLTAGE AND FREQUENCY	440 V 60 Hz
6. MOTOR TYPE	SQUIRREL CAGE ROTOR TYPE
7. SERVICE FACTOR AND RATTING	1 . 0 , 30 MIN
8. LOCATION AND INSULATION CLASS	INDOOR, OUTDOOR, B CLASS
9. DESIGN TRMPERATURE RISE(BY RESISTANCE)	80 ℃
10. FULL LOAD SPEED	1050/460 RPM
11. FULL LOAD CURRENT	1.6/1.8 A
12. STARTING CURRENT AT RATED VOLTAGE	6.4/5.4 A
13. MINIMUM STARTING VOLTAGE	400 V
14. EFFICIENCY AT 100% RATED LOAD	57.5/35 %
15. POWER FACTOR AT 100% RATED LOAD	64.5/50 %
16. STARTING TORQUE	0.757/0.506 KG.M
17. SITE ALTTITUDE(UNDER)	1000 M
18. ENCLOSURE & COOLING METHOD	TENV
19. TYPE OF BEARING	PL : 6205zz OPL : 6204zz
20. MOUNTING	HORIZONTAL
21. MAXIMUM AMBIENT TEMPURE	40 ℃
22. BEARING LUBRICATION	GREASE
23. STARTING METHOD	FULL VOLTAGE

검사 제외
한국산업안전보건공단
산업재해예방 안전보건공단
KOREA OCCUPATIONAL SAFETY & HEALTH AGENCY
192.168.11.76 / 2014-04-19 09:51:43

불법복제 및 배포금지

THREE PHASE INDUCTION MOTOR DATE SHEET

SCHEDULE OF TECHNICAL DATA

1. SERVICE	TRAVERSING
2. MANUFACTURE	극동호이스트 (주)
3. FRAME NUMBER	90 L
4. RATED POWER	0.5/025 KW x 6/12 P
5. RATED VOLTAGE AND FREQUENCY	460 V 60 Hz
6. MOTOR TYPE	SQUIRREL CAGE ROTOR TYPE
7. SERVICE FACTOR AND RATTING	1 . 0 , 30 MIN
8. LOCATION AND INSULATION CLASS	INDOOR, OUTDOOR, B CLASS
9. DESIGN TRMPERATURE RISE(BY RESISTANCE)	80 ℃
10. FULL LOAD SPEED	1050/460 RPM
11. FULL LOAD CURRENT	1.5/1.72 A
12. STARTING CURRENT AT RATED VOLTAGE	6.2/5.3 A
13. MINIMUM STARTING VOLTAGE	418 V
14. EFFICIENCY AT 100% RATED LOAD	57.5/35 %
15. POWER FACTOR AT 100% RATED LOAD	64.5/50 %
16. STARTING TORQUE	0.757/0.506 KG.M
17. SITE ALTTITUDE(UNDER)	1000 M
18. ENCLOSURE & COOLING METHOD	T E N V
19. TYPE OF BEARING	PL : 6205zz OPL : 6204zz
20. MOUNTING	H O R I Z O N T A L
21. MAXIMUM AMBIENT TEMPURE	40 ℃
22. BEARING LUBRICATION	G R E A S E
23. STARTING METHOD	F U L L V O L T A G E

검사필
한국산업안전보건공단
안전보건공단
KOREA OCCUPATIONAL SAFETY & HEALTH AGENCY
192.168.11.76 / 2014-04-19 09:51:43

불법복제 및 배포금지

THREE PHASE INDUCTION MOTOR DATE SHEET

SCHEDULE OF TECHNICAL DATA

1. SERVICE	TRAVERSING
2. MANUFACTURE	극동호이스트 (주)
3. FRAME NUMBER	90 L
4. RATED POWER	0.5/025 KW x 6/12 P
5. RATED VOLTAGE AND FREQUENCY	480 V 60 Hz
6. MOTOR TYPE	SQUIRREL CAGE ROTOR TYPE
7. SERVICE FACTOR AND RATTING	1 . 0 , 30 MIN
8. LOCATION AND INSULATION CLASS	INDOOR, OUTDOOR, B CLASS
9. DESIGN TRMPERATURE RISE(BY RESISTANCE)	80 ℃
10. FULL LOAD SPEED	1050/460 RPM
11. FULL LOAD CURRENT	1.4/1.6 A
12. STARTING CURRENT AT RATED VOLTAGE	5.82/4.93 A
13. MINIMUM STARTING VOLTAGE	436 V
14. EFFICIENCY AT 100% RATED LOAD	57.5/35 %
15. POWER FACTOR AT 100% RATED LOAD	64.5/50 %
16. STARTING TORQUE	0.757/0.506 KG.M
17. SITE ALTTITUDE(UNDER)	1000 M
18. ENCLOSURE & COOLING METHOD	T E N V
19. TYPE OF BEARING	PL : 6205zz OPL : 6204zz
20. MOUNTING	H O R I Z O N T A L
21. MAXIMUM AMBIENT TEMPURE	40 ℃
22. BEARING LUBRICATION	G R E A S E
23. STARTING METHOD	F U L L V O L T A G E

사업개체에서
인천보건공단
KOREA OCCUPATIONAL SAFETY & HEALTH AGENCY

192.168.11.76 / 2014-04-19 09:51:43

불법복제 및 배포금지

ORIGINAL

KISWIRE
KISWIRE QINGDAO LTD.
No.600 Chuangye Road, Qingdao Development Zone, Shangdong,P.R.China
Tel : 86-532-86821916, Fax :86-532-86821949 www.kiswire.com

ISSUE NO. PW9034 DATE *May. 27. 2009*

MILL TEST CERTIFICATE

THIS IS TO CERTIFY THAT THE MATERIAL DESCRIBED BELOW WAS MANUFACTURED IN ACCORDANCE WITH KISWIRE LTD SPECIFICATION AND APPLICABLE SECTIONS

OF **KSD 3514** (B Grade)

TO MESSRS KISWIRE LTD.

MATERIAL DESCRIPTION UNGALVANIZED STEEL WIRE ROPE

06 X 37 + FC 1000M X 2 REEL

EX NO. PW9034 T/T NO.

ORDER NO. REEL NO. 1~2 SAMPLING NO. 1

DIAMETER OF ROPE 10.0 mm TYPE OF CORE Fiber Core

SPECIFIED BREAKING LOAD 56.6 kN SAMPLE BROKE AT 60.4 kN

WT. OF ZINC COATING OF OUTER WIRE MIN. g/m² MAX. g/m²

ROPE LAY RHRL LAY LENGTH 62.8 mm

LUBRICATION A-2

CHEMICAL ANALYSIS OF WIRE ROD

CHARGE NO.	C×100	Si×100	Mn×100	P×1000	S×1000
050695E	73	21	42	13	4

DATE OF SAMPLE TEST *May. 27. 2009*

CHIEF INSPECTOR D.S.NA
KISWIRE QINGDAO LTD.

산업재해예방
안전보건공단
KOREA OCCUPATIONAL SAFETY & HEALTH AGENCY

192.168.11.76 / 2014-04-19 09:51:43

불법복제 및 배포금지

COSMO WIRE LTD.

#4-10, KOYEON-RI, WOONGCHON-MYUN,
ULJU-KU, ULSAN, KOREA

TEL : 82. 52. 261. 0478/9
FAX : 82. 52. 261. 0480

MILL TEST CERTIFICATE

DNV Det Norske Veritas
ISO 9001:2008 International Certification Registrar Ltd

SHEET NO.:

Customer/Messrs.: 삼 전 로 푸 ㈜

L/C No.:	Order No.:
Commodity : STAINLESS STEEL WIRE ROPE	Our Ref No:
Nominal Dia. Of Cable : 3/8"	Type : AISI 304
Construction : 7 X 19	Lube : DRY
Specification : EN12385-4	Type of Lay : R. H. O. L
Order Quantity : 1,525M X 1R/L	Reel No.:
Net Weight/Reel : 551.14KG	Gross Weight/Reel :

CHEMICAL ANALYSIS OF WIRE ROD (%)

Component / Heat no.	C	Si	Mn	P	S	Ni	Cr	Mo	Cu	others
S 28040	0.066	0.39	1.30	0.028	0.003	8.32	18.46			

TEST RESULTS

ITEM	UNIT	SPEC.	ACTUAL
Diameter of Cable	MM	9.60 - 10.08	9.78 - 9.92
Breaking Strength	KG	5,455	6,513
Preforming			Good
Length of Lay	MM		66.00
Diameter of Wires	MM	0.635	0.636
Tensile Strength of Wires	N/㎟	1,770	1,860

REMARKS :

We hereby certify that the above results are true and correct in every details.

MAR/ 10/ 2011
Date

COSMO WIRE LTD. Quality Control

In wha Kim
Manager of Quality Assurance Dept.
Test by : In wha kim
E-Mail : megno7777@nate.com

COSMO WIRE LTD. MANUFACTURERS & EXPORTERS

KOREA OCCUPATIONAL SAFETY & HEALTH AGENCY

192.168.11.76 / 2014-04-19 09:51:43